# Hardware Reference Manual

## Digital
## AC Servo Drives Series
# SCE900

Order code: MAE 900-E
Revision September 2000

Produced with reference to information in:
Manual MAE900, Rev. 3,
Part# MAE900, dating April, 1998

Eduard Bautz GmbH + Co.KG
A Pacific Scientific Subsidiary
Robert-Bosch-Str. 10
D 64331 Weiterstadt

**Tel.: +49 6151 8796 10**

**Fax: +49 6151 8796 123**

Every possible care has been take to ensure the accuracy of this technical description. All information contained in this manual is correct to the best of our knowledge and belief but cannot be guaranteed. In the interests of our customers we reserve the right to make improvements and enhancements to hardware, software and documentation at any time without prior notification.

We are always grateful to receive criticisms and suggestions.

# Hardware Reference Manual

## Digital
## AC Servo Drives Series
# SCE900

Order code: MAE 900-E
Revision September 2000

Produced with reference to information in:
Manual MAE900, Rev. 3,
Part# MAE900, dating April, 1998

# Contents:

Eduard BAUTZ GmbH + Co.KG, D-64331 Weiterstadt, Tel. +49-6151-8796-10, Fax +49-6151-8796-123

# 1 Product Overview

**Introduction**

This manual describes the hardware for the **SCE 900** series of compact drives for AC servomotors. It gives technical data for various sizes of installation. This technical description contains important instructions on assembly, installation and start-up.
The digital control functions in the basic SCE900 device are provided by the firmware in the basic unit, regardless of whether or not an option card is installed. However, for start-up it is assumed that an option card such as the OCE930 serial interface card has been plugged in, if only temporarily. This allows parameters to be assigned to the firmware from a PC using the 930 dialog program, for instance.
During start-up, please also refer to the technical hardware and software description for the option card being used.

**Characteristics**

- Compact device
- Built-in power pack
- CE marked without optional mains filter
- Onboard digital signal processor (DSP)
- Standard digital and analog interfaces:
  - ±10 V analog interface – shaft speed or torque control
  - Step and Direction digital interface for shaft position or speed control
  - Step Up/Step Down Digital interface for shaft position or speed control
  - Incremental encoder input for controlling position or speed / performing electronic gearing follower[1)]
  - Incremental encoder output for feedback to position controller / commanding electronic gearing follower
- Incremental encoder simulation up to 16,384 pulses/revolution
- Interchangeable option cards for flexibility:
  - RS232/485 serial interface
  - SERCOS fiberoptic interface for multiaxis operation with expanded I/O functions
  - Servo BASIC*Plus*® programmable position control
- Personality parameters stored in the basic device or on interchangeable option card (in EEPROMs)
- Digital self-optimization for easy startup: no potentiometer balancing required
- All system and application parameters assigned in software – stored in EEPROM
- Resolver-based sinusoidal control of shaft commutation, speed and position
- Optional commutation with incremental encoder.[1)]
- Digital and analog I/Os
- Full front panel access with the aid of unambiguously marked connector
- Comprehensive protection circuits and diagnostics for simplified setup
- Current control with inaudible high frequency PWM
- Registered to UL and CSA certification standard
- Momentary (5s) double output current available
- Easy-to-use Windows® software for parameter setting

[1)] When using encoder commutation, the position control loop can be used in restricted mode only.

## 1.1 Characteristics of the Basic Devices

**Description**

The SCE900 series is a family of compact drives for AC servomotors. A single digital signal processor controls the current, rotation speed and position. All system and application parameters are assigned using software; this eliminates drift whilst insuring reliability and reproducibility. Devices are available in several performance classes with built-in power packs and regeneration circuits. Motor and resolver cable can be supplied to complete your servo system, eliminating problems at startup and providing continuous operation that is both reliable and noise-free.

The SCE900 series is designed for stationary operation. The basic SCE900 device includes several command interfaces. An analog ±10 V interface for specifying motor speed or torque and an incremental interface for specifying position or speed are provided as standard.

Position control operates like a pulse tracking servo in the basic unit. It insures that the axis follows the incremental encoder signals of a master axis. Two standard stepper interfaces, Step/Direction and Step Up/Step Down, are also available to command motor position or shaft speed. Thus the drive can also be used in an electronic gearing follower mode by using these inputs.

The drive also has an emulated incremental encoder output. It is derivated from the resolver signal as though an incremental encoder was fitted to the motor.

Various option cards are available to enhance the functions provided by the basic SCE900 unit. One of the option cards is needed for setting up the SCE900 parameters, but can be removed after the parameters have been set. All option cards can take the place of the basic unit's parameters in nonvolatile memory, so that interchangeable parameter setting becomes a practical possibility. In addition, all option cards allow the customer to upgrade the device software without disassembling the system or the servo drive.


Eduard BAUTZ GmbH + Co.KG, D-64331 Weiterstadt, Tel. +49-6151-8796-10, Fax +49-6151-8796-123

## 1.2 Characteristics of the Option Cards

### 1.2.1 Option Card with RS232/485 Serial Interface

**OCE930 option card**

This card enables the user to program the various SCE900 setup parameters with the aid of an IBM compatible PC. It can be connected to any host system with RS232/485 communications capability.
Parameters stored on option cards can be transferred to the nonvolatile memory of the basic device. The option card can then be removed. This makes it possible to set the parameters on all basic devices with a single option card. Alternatively, an OCE930 option card can stay in each basic device and be the digital "personality module“ of a drive axis. Then the basic device can be quickly exchanged and no extra work is needed.

### 1.2.2 Option Card with SERCOS Interface

**OCE940 option card**

This module enables the SCE900 servodrive to use SERCOS (**SE**rial **R**eal-time **CO**mmunications **S**ystem) to communicate via fiberoptics with a master computer. SCE900 devices in multiaxis distributed network systems are then able to work with our trendsetting multiaxis computers using the international standard SERCOS interface.

### 1.2.3 Option Card with Position Control

**OCE950 option card**

With ServoBASIC*Plus*® programmable position control.
This option card upgrades the standard drive, giving it complete position control which executes preprogrammed movements or makes a simple user interface available when used with a standard ASCII terminal and a simple program, depending on the I/O. All the basic unit's parameters and even its I/O channels can be evaluated and used in the course of the program. You can create programs for the device yourself with a working knowledge of BASIC. The necessary additional commands are available in the motor drive applications. This card can be fitted with different sizes of program memory to suit the application. For simple multiaxis applications the card can be fitted with the PacLan® bus system, which allows a simple data exchange for an individual axis. A more detailed description of the programming and the command set is available on request.

**Typical ServoBASIC program**

```
Position1:                ‘Step label
Accel Rate = 10000        ‘Acceleration rate
Decel Rate = 10000        ‘Deceleration rate
Input "Distance :“; Path  ‘Enter distance on terminal
IndexDist = Path          ‘Assign distance
GoIncr                    ‘Move
```

## 1.3 Using the Latest Technology

In practice this means:

**Digital Resolver-to-Digital Conversion (DRDC)**

An advanced patented (US Patent Number 5,162,798) Digital Resolver-to-Digital Converter called DRDC provides industry leading 24-bit-per-revolution position resolution. This very high position resolution yields an all digital velocity control with smoothness indistinguishable from an all analog control, but with the advantages of the accuracy and reproducibility of a digital controller.

**Signature current control**

The SCE900 series utilizes signature control , a proprietary form of brushless motor sinusoidal commutation. This current modulation technology significantly reduces ripple torque due to harmonics in the motor's back EMF wave form. By tailoring the sinusoidal current's wave shape or "signature" to match the motor's back EMF, electromagnetic ripple torque is reduced to ± 2 % or less. In your application, this results in excellent machine precision and smoothness with high throughput capability. This proprietary commutation control also provides exceptional high-speed motor control.

**Fully digital control**

The combination of DSP, DRDC and ASICs (Application Specific Integrated Circuits) gives the SCE900 its all digital advantage. An all digital implementation reduces component count to increase reliability while reducing cost, eliminates analog drift, eliminates imprecise potentiometer adjustments, reduces size, and increases flexibility.

**Autotuning**

In many applications, the Autotuning feature will set the servo system compensation parameters. You won't need oscilloscopes, meters, or other instrument – just a personal computer – to set up your system. The system allows you to select the type of performance desired.

**IGBT PWM power stage**

Insulated Gate Bipolar Transistor (IGBT) technology is used in the power stages of every SCE900 series drive. This technology makes exceptionally efficient use of PWM (Pulse Width Modulation) frequencies above the audible range. As a direct result, motor operation is more efficient and the annoyance of audible PWM noise is eliminated.


Eduard BAUTZ GmbH + Co.KG, D-64331 Weiterstadt, Tel. +49-6151-8796-10, Fax +49-6151-8796-123

## 1.4 Advantages:

**I/Os**

- ±10 V differential analog input
- 2 x ± 5-V analog outputs (monitor outputs)
- 6 bidirectional I/Os, TTL or 24-V logic compatible
- Incremental encoder output
- Incremental encoder input (or step and direction input, or Step Up/Step Down input)
- Enable input
- Auxiliary voltage output + 5 V / 200 mA

**Communication**

- OCE930 serial option card
  - RS232 interface, 9600 baud
  - RS485 interface, 9600 baud, maximum 32 user nodes
- OCE940 SERCOS option card
- PacLan® OCE950 programmable positioning option card

**Operating characteristics**

- Fully digital control of position, rotation speed and torque with large control bandwidth
- IGBT power stage with PWM
- Fully enclosed, compact housing for mounting in installation cabinet

**Settings**

- All settings made via Windows® software

**Protection devices/ Diagnostics**

- 7-segment status display
- Automatic inrush current limitation
- Short-circuit proof power stage outputs
- Motor and drive thermo protection
- $I \times t$ current monitoring
- Adjustable undervoltage protection
- Overvoltage protection, integral regeneration circuit

**Typical applications**

- Packaging machinery
- Electronic assembly equipment
- Material handling
- Robotics
- X-Y tables and guideways
- Specialty machinery
- Multiaxis systems

## 1.5 Intended Use

The described device is developed, produced, tested and documented in accordance with the relevant standards. When used as intended by the producer, the device presents no risk to persons or property. Intended use implies that the devices will be used exactly as described in the product overview, that installation and particularly startup and incorporation into a machine layout will be undertaken by qualified personnel, and that the danger notices, safety instructions, regulations and warnings contained in this manual will be observed.

# 2 Technical Data

## 2.1 General Technical Data

| | | |
|---|---|---|
| **Analog input command** | Range | ± 10 V velocity or torque |
| | Resolution | ≥ 14 bits |
| **Digital input command** | Modes | Step/direction, or step up/down, or incremental encoder inputs |
| | Max. input frequency | |
| | Step/direction or up/down pulse | 1 MHz |
| | Incremental encoder pulses | 833 kHz |
| **Current loop** | Bandwidth | 1500 Hz max. |
| | Update interval | 62.5 µs |
| **Velocity loop** | Bandwidth | 400 Hz max. |
| | Update interval | 250 µs |
| | Command resolution | < 0.001 rpm. |
| | Feedback accuracy | 0.05 % max. |
| | Feedback ripple | 0.75 % peak-to-peak at 1000 rpm (drive only)<br>3 % peak-to-peak at 1000 rpm (with 20 arcmin resolver) |
| | Feedback resolution | 0.014 rpm. |
| | Range | 0 to 30,000 rpm. |
| **Position loop** | Bandwidth | 100 Hz max. |
| | Update interval | 1 ms |
| | Command resolution | 65,536 steps/rev. (16 bits/rev.) |
| | Feedback accuracy | ± 5.3 arcmin (drive only)<br>± 25 arcmin (with 20 arcmin resolver) |
| | Feedback resolution | 16,777,216 (24 bits/rev.) |
| **Encoder output signals** | Type | Incremental encoder with marker pulse, differential RS422 line driver (TTL level) |
| | Resolution | 128, 256, ... 16384 pulses/rev. (binary) or<br>125, 250, ... 16000 pulses/rev. (decimal) |
| | Max. output frequency | 833 kHz |
| | Marker pulse width | One quadrature pulse nominal |
| **Serial interface (option card)** | Type | RS232, RS485 |
| | Baud rate | 9600 baud |
| | RS485 nodes | Max. 32 |
| **I/Os** | Dedicated input | Enable, 5 V or 24 V, LOW active |
| | Programmable I/O | 6 bidirectional I/Os, 5 V or 24 V,<br>PLC compatible, with 2 analog outputs |


Eduard BAUTZ GmbH + Co.KG, D-64331 Weiterstadt, Tel. +49-6151-8796-10, Fax +49-6151-8796-123

Continued:
General technical data:

| | | |
|---|---|---|
| **Environmental conditions** | Storage temperature | – 40°C to +70°C |
| | Operating temperature SCE9x3 / SCE9x4 / SCE9x5: | |
| | Convection cooling [1]) | 0°C .... 25°C to 60°C |
| | Forced air cooling [2]) | 0°C .... 50°C to 60°C |
| | Operating temperature SCE9x6 and SCE9x7: | |
| | Forced air cooling inherent | 0°C .... 50°C |
| | Altitude | max. 1500 meters |
| | Humidity | 10% to 90%, non-condensing |

[1]) Linearly derate output power and output current from full rating at 25 °C to 53% at 60°C.
[2]) Linearly derate output power and output current from full rating at 50 °C to 53% at 60°C.

| | | |
|---|---|---|
| **Protection class** | IP20 | |
| **Weight** | SCE903A3 | 5.0 kg |
| | SCE903 | 6.5 kg |
| | SCE904 | 6.6 kg |
| | SCE905 | 9.5 kg |
| | SCE906 | 13,5 kg |
| | SCE9x7 | 18 kg |

## 2.2 Power Specifications

| | SCE9x3A3 | SCE9x3 | SCE9x4 | SCE9x5 |
|---|---|---|---|---|
| **Input voltages** | | | | |
| control power supply | 230 $V_{AC}$ +10% -55 %, 50/60 Hz single phase | | | |
| main power supply | 400 $V_{AC}$ +32 % -55 %, 50/60 Hz three phase, symmetrically | | | |
| **Input current** | | | | |
| for control power from 1 × 230 $V_{AC}$ - mains | 250 mA | | | |
| for main powe from 3×400 $V_{AC}$ - mains | 5A | | 10 A | 15 A |
| recommended fuse for 3×400 V - mains | c. br. 10 A, C 3-pole break. | circuit breaker 16 A, characteristic C 3-pole breaking | | |
| **Peak output current, r.m.s and *(sine peak)*** | | | | |
| max. 5 s, up to 50°C ambient temp. | 7,5 *(10,5)* A | | 15 *(21,2)* A | 22,5 *(31,8)* A |
| **Continuous output current, r.m.s and *(sine peak)*** | | | | |
| at 25°C with convection cooling | 3,75 *(5,3)* A | | 7,5 *(10,6)* A | 11,25 *(15,9)* A |
| at 50°C with forced air cooling | not possible | 3,75 *(5,3)* A | 7,5 *(10,6)* A | 11,25 *(15,9)* A |
| at 50°C with convection cooling | 2,5 *(3,5)* A | 3,75 *(5,3)* A | 5,0 *(7,1)* A | 7,5 *(10,7)* A |
| **Peak output power at 3 × 400$V_{AC}$ - mains** | | | | |
| max. 1s, up to 50°C ambient temp. | 5 kVA | | 10 kVA | 15 kVA |
| **Continuous output power at 3 × 400 $V_{AC}$ - mains** | Reduce continuous output power linearly by 0.5 % for each meter of motor cable in excess of 10 meters. | | | |
| at 25°C with convection cooling | 2,5 kVA | | 5 kVA | 7,5 kVA |
| at 50°C with forced air cooling | not possible | 2,5 kVA | 5 kVA | 7,5 kVA |
| at 50°C with convection cooling | 2,1 kVA | 2,5 kVA | 3,3 kVA | 5,0 kVA |
| **Power stage efficiency** | | | | |
| at continuous power | >96 % | | >97 % | >97 % |
| **Regeneraton circuit power** | | | | |
| Peak power (for 350 ms) | 8 kW | 16 kW | | |
| Continuous power | | | | |
| at 25°C with convection cooling | 25 W | 100 W | | 200 W |
| at 50°C with forced air cooling | not possible | 125 W | | 250 W |
| at 50°C with convection cooling | 20 W | 100 W | | 200 W |
| **Output current ripple frequency** | 20 kHz | | | |
| **Minimum motor winding inductance** | 5,7 mH | | 2,8 mH | 1,9 mH |
| **Maximum motor cable length** | 50 meters, CE approved for max. 10 meters with internal filter; CE approved for 50 meters with additional mains filter | | | |
| **EMC- RFI suppression** | EN50081-2 / EN 50082-2 (optional EN50081-1 with additional mains filter) | | | |
| **Regeneration circuit cut-in voltage** | 820 – 830 $V_{DC}$ | | | |


Eduard BAUTZ GmbH + Co.KG, D-64331 Weiterstadt, Tel. +49-6151-8796-10, Fax +49-6151-8796-123

| SCE9x6 (obsol. in future) | SCE9x6-2 | SCE9x7 | |
|---|---|---|---|
| | | | **Input voltages** |
| 115 **or**[1] 230 $V_{AC}$ | | | control power supply |
| 400 $V_{AC}$ +32% -55%, 50/60 Hz three phase, symmetrically | | | main power supply |
| | | | **Input currents** |
| 300 mA | 300 mA | 500 mA | for control power from 1 × 230 $V_{AC}$ - mains |
| 30 A | 30 A | 60A | for main powe from 3×400 $V_{AC}$ - mains |
| circuit breaker 32A , characteristic C 3-pole breaking | | c. br. 63 A, C 3-pole breaking | recommended fuse for 3×400 V - mains |
| | | | **Peak output current, r.m.s and *(sine peak)*** |
| 33,7 *(47,75)* A | 45 *(63,5)* A | 90 *(127)* A | max. 5 s, up to 50°C ambient temp |
| | | | **Continuous output current, r.m.s and *(sine peak)*** |
| - / - | - / - | - / - | at 25°C with convection cooling |
| 22,5 *(31 8)* A | 22,5 *(31,8)* A | *45 (63,5)* A | at 50°C with forced air cooling |
| - / - | - / - | - / - | at 50°C with convection cooling |
| | | | **Peak output power at 3 × 400 $V_{AC}$ - mains*)*** |
| 22,5 kVA | 30 kVA | 60 kVA | max. 1s, up to 50°C ambient temp. |
| | | | |
| Reduce continuous output power linearly by 0.5 % for each meter of motor cable in excess of 10 meters. | | | **Continuous output power, at 3 × 400 $V_{AC}$ - mains** |
| - / - | - / - | - / - | at 25°C with convection cooling |
| 15 kVA | 15 kVA | 30 kVA | at 50°C with forced air cooling |
| - / - | - / - | - / - | at 50°C with convection cooling |
| | | | **Power stage efficiency** |
| >97 % | >97 % | >98 % | at continuous power |
| | | | **Regeneration circuit power** |
| 24 kW | 30 kW | with external resistor: 60 kW | Peak power (for 350 ms) |
| | | | Continuous power |
| - / - | - / - | - / - | at 25°C with convection cooling |
| 250 W | 250 W | with external resistor: 15 kW | at 50°C with forced air cooling |
| - / - | - / - | - / - | at 50°C with convection cooling |
| | | | |
| 16 kHz | 16 kHz | 10 kHz | **Output current ripple frequency** |
| | | | |
| 1,6 mH | 1,2 mH | 1,0 mH | **Minimum motor winding inductance** |
| | | | |
| 50 meters, CE approved for max. 10 meters with int. filter; CE approved for 50 meters with additional mains filter | | | **Maximum motor cable length** |
| | | | |
| EN61800-3 | | | **EMC- RFI suppression** |
| | | | |
| 820 – 830 $V_{DC}$ | | | **Regeneration circuit cut-in voltage** |

[1] With the **SCE9x6 / SCE9x6-2 / SCE9x7** the wide range capability of the control power supply input can not be utilized, because this AC voltage feeds built-in fans, witch need defined voltages. Two variants of **SCE9x6** (obsolete soon) can be ordered ex works

a) SCE9x6 x**2**-xxx-xx for control voltage supply = 230 V +/- 10% f = 50...60 Hz
b) SCE9x6 x**1**-xxx-xx for control voltage supply = 115 V +/- 10% f = 50...60 Hz

**SCE9x6-2 and SCE9x7** drives accept either 115 V (±10%) or 230 V (±10%) as control power supply. These drive types have a relay in order to switch the fans in series or parallel, dependent from control power supply level.

# 3 Model Identification

## 3.1 Ordering Information for SCE900 – Basic Devices

SCE 9 0 4 (-2) A N – 0 0 1 – 01

- 01 = Standard software for basic drive
- 1 = With US standard bidirectional I/Os
  2 = With European PLC standard bidirect. I/Os
- 0 = Standard
  For OCE950[1)]
  0, 1 = Option card with 32k RAM
  2 = Option card with 128k RAM
  3 = Option card with 32k RAM and PacLan™
  4 = Option card with 128k RAM and PacLan™
- 0 = Standard
- N = No fan, convection cooling
  1 = With fan for 115 $V_{AC}$, forced air cooling
  2 = With fan for 230 $V_{AC}$, forced air cooling
  3 = With cooling plate instead of heat sink, drive width approx. 85 mm[2)]
- A = With mating connector kit
- (-2) = only SCE9x6: New version with Peak Output Current = 2 x Continuous Output Current
- 3 = Output power 2.5 kVA, cont. current 3.75 $A_{rms}$
  4 = Output power 5,0 kVA, cont. current 7.50 $A_{rms}$
  5 = Output power 7.5 kVA, cont. current 11.25 $A_{rms}$
  6 = Output power 15.0 kVA, cont. current 22.5 $A_{rms}$
  7 = Output power 30.0 kVA, cont. current 45 $A_{rms}$
- 0 = No option card, no communications or setup interface
  3 = With option card OCE 930..., setup or serial communication over RS232/485
  4 = With option card OCE 940..., communication and control over SERCOS interface
  5 = With option card OCE 950..., with Servo Basic*Plus*® programmable position control
- 9 = Drive series
- SCE = Digital servo drive

[1)] Order manual separately
[2)] SCE903 only, forced air cooling not possible

## 3.2 Ordering Information for Option Cards

**OCE 930 - 001 - 01**

01 = Firmware update of basic drive as standard
00 = No software update
higher = Custom software

001 = Standard
higher = Custom version

3 = RS232/485 serial interface
4 = SERCOS interface
5 = Programmable indexer

E = European CE version
free = USA version

OC = Option card

## 3.3 Ordering Information for Manuals

**MAE 900 - D**

D = Deutsch (German) for SCE9xxXX-xx**2**-xx
E = English for SCE9xxXX-xx**2**-xx
free = US manual for SCE9xxXX-xx**1**-xx

0 = Technical description – hardware reference manual for AC servo drives series SCE900 (basic device)
3 = Technical description – hardware and software for OCE930 option card (with serial interface) incl. program "930 DIALOG“ on 3 ½“ diskette
4 = Technical description – hardware and software for OCE940 option card (SERCOS interface)
5 = Technical description – hardware and software for OCE950 option card (programmable indexer) incl. "950 IDE“ program on 3 ½“ diskette

E = Manual for SCE series
free = US manual for SC_ series, not for SCE

MA = Manual

# 4 Additional Accessories

## 4.1 Cables

Information given here relates to the BAUTZ Technical Information „ACServo-Zubehör.doc“. All specifications in that Data Sheet and subsequently those given here are subject to change without notice.
For cables in energy chain applications and for such with conductor cross section of >1,5 mm² please ask us.

**Cable for motors without brakes**

**BAUTZ order code KAB-MOB-x**
The "x“ in the order code stands for the required length in meters.
Cable for motors without a holding brake,
Suitable for SCE9x3, 9x3A3, 9x4.
Shielded; (6×1.5 $mm^2$), diameter 11 mm.
Not suitable for energy chain applications.
Not suitable for SCE9x5, 9x6, 9x6-2, 9x7. With them, use cable with appropriate cross section. Table on page 48 helps.

**Cable for motors with brakes**

**BAUTZ order code 57.211**
Specify length required.
**If the supply voltage for the holding brake is included in the motor lead, the wiring for the holding brake <u>must</u> have extra shielding** to prevent interference with the 24 V supply.
A special cable with individual and common shielding is supplied for this purpose: ($4 \times 1.5\ mm^2 + 2 \times (2 \times 0.25\ mm^2)$).
Suitable for SCE9x3, 9x3A3, 9x4.
Not suitable for energy chain applications.
Not suitable for SCE9x5, 9x6, 9x6-2, 9x7. With them, use cable with appropriate cross section. Table on page 48 helps.

**Resolver cable**

**BAUTZ order code KAB-RES-x-,**
The "x“ in the order code stands for the required length in meters.
Cable double shielded; ($4 \times (2 \times 0.25\ mm^2)$), diameter 11.5 mm.
Not suitable for energy chain applications.

**Incremental encoder cable**

**BAUTZ order code 57.203,**
State length required.
12-core, shielded, ($2 \times 0.5\ mm^2 + 10 \times 0.14\ mm^2$).
Not suitable for energy chain applications.

**Special cable for external regeneration resistor**

Please remember that a cable to an external regeneration resistor has to be suitable for 850 $V_{DC}$ which means that it must have a higher insulation quality than commercially available low-voltage cable. It must also be shielded.
You may choose the same conductor cross section as with the motor cable. For a SCE9x7 drive a cross section of 6 mm² will be sufficient.


Eduard BAUTZ GmbH + Co.KG, D-64331 Weiterstadt, Tel. +49-6151-8796-10, Fax +49-6151-8796-123

## 4.2 Mating Connectors to Sockets on the Motor

### 4.2.1 Mating connector Kits

| | |
|---|---|
| **Mating connector kit for M25x – M50x, W40x – W50x F50x – F80x** | **BAUTZ order code: 57.397**<br>consisting of:<br>1 x 57.380 mating connector for motor<br>1 x 57.325 mating connector for resolver<br>suitable for M254 to M50x, F50x to F80x, and W404 to W50x with connectors instead of standard terminal boxes. |
| **Mating connector kit for M71x and F100x motors** | **BAUTZ order code: 57.351**<br>consisting of:<br>1 x 57.355 mating connector for motor<br>1 x 57.325 mating connector for resolver<br>The kit contains the large connector for M71x and F100x motors.<br>If these motor types are ordered with a terminal box carrying the resolver socket, then only the resolver connector 57.325 is required. |

### 4.2.2 Single Mating Connectors

| | |
|---|---|
| **Mating connector for M25x – M50x, W40x – W50x F50x – F80x** | **BAUTZ order code: 57.380**<br>Mating connector (new model) for motors M25x to M50x, F50x to F80x, and W404 to W50x with connectors instead of standard terminal boxes.<br>**The cable shielding must be connected to the mating connector housing, and the connector housing is linked to the protective conductor pin.** |
| **Resolver mating connector for M, W and F motors** | **BAUTZ order code: 57.325**<br>For all AC servomotors in the M, F, and W series in versions with resolver connection sockets. |

## 4.3 Other Accessories

**External high power regeneration resistors**

All regeneration resistors mentioned here have a perforated sheet metal housing which gives them protection class IP20 when mounted on a sheet metal panel. The resistor's rated power given below defines continuous power at a resistor temperature of 300 °C. These resistor types accept high overload if the duty cycle is appropriate.

If the drive's internal regeneration resistor is not sufficient, we suggest using an external regeneration resistor, one for each drive
**SCE9x3A3, SCE9x3 or SCE9x4**
1 piece **BAUTZ order code: 82 RK** (82 Ohm, 300 Watt continuous power)

Dependent from the power to be absorbed, for a
**SCE9x4 or SCE9x5** drive you may provide
1 piece **BAUTZ order code: 36RK-275W** (36 Ohm, 275 Watt)
1 piece **BAUTZ order code: 36RK-500W** (36 Ohm, 500 Watt)
2 piece **BAUTZ order code: 82 RK** wired in parallel per SCE ($P_{cont}$= 2x300 W)

Dependent from the power to be absorbed, for a
**SCE9x6** you may provide
1 piece **BAUTZ order code: 27RK – 500 W** or
**27RK – 1000 W**

Dependent from the power to be absorbed, for a
**SCE9x6-2** you may provide
1 piece **BAUTZ order code: 22RK – 500 W** or
**22RK – 1000 W**

**SCE9x7** drives do not have any internal regeneration resistor.
Dependent from the power to be absorbed, please provide
1 piece **BAUTZ order code: 12RK – 500 W** or
**12RK – 1500 W**

We offer regeneration resistors with higher rated power on request
For dimensions and details see section 8.11 - Regeneration Resistor – page 52.

---

**Cover kit**

**BAUTZ order code: 57.388 (1 kit)**
When mounted outside the installation cabinet, the 4 plugin Phoenix screw terminals on SCE9x3 /9x3A3 / 9x4 / 9x5 drives must be fitted with a cover in order to comply with the regulations on protection against the risk of touching.

SCE9x6 and SCE9x7 have **fix screw terminals for J1, J2 and J5 instead.**
SCE9x6 and SCE9x7 must be mounted inside an installation cabinet.

---

**Mains supply choke for SCE9x6 and 9x7**

For SCE9x6: **BAUTZ order code: 57.143**
*Manufacturer: Block (Verden, Germany), Type NKD25 /1,17*

For SCE9x7: **BAUTZ order code: 57.432**
*Manufacturer: Block (Verden, Germany), Type NKD50 /0,59*

(For all details see section 8.6 – Input Power Supply – on pages 41 ff.)

**Fan unit for SCE9x3AN SCE9x4AN SCE9x5AN**

**BAUTZ order code: OFE904-002 (1 piece)**
Fan unit to retrofit the SCE 9x3AN / 9x4AN / 9x5AN, supply voltage **230 $V_{AC}$**

**BAUTZ order code: OFE904-001 (1 piece)**
Fan unit to retrofit the SCE 9x3AN / 9x4AN / 9x5AN, supply voltage **115 $V_{AC}$**

Not suitable for SCE9x3A3.
Not suitable for SCE9x6 and SCE9x7. (Devices have built-in fan)

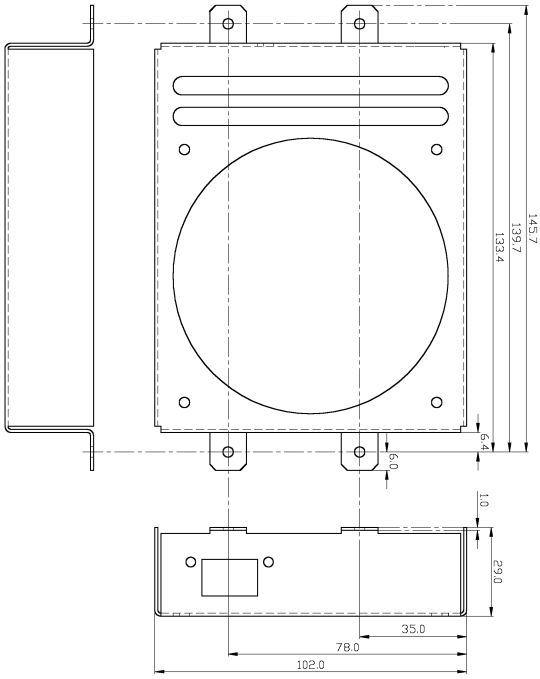


Plug-in terminals provided for fan power supply. We suggest to power fan togehter with the SCE Logic supply voltage.

Mounting:
Attach fan utilizing two screws already present on the bottom side of the SCE9x3AN / 9x4AN / 9x5AN housing.
With the SCE9x3AN / 9x4AN utilize the two right lugs of the fan housing.
With the SCE9x5AN, utilize the two left lugs of the fan housing.

Fan unit not suitable for SCE9x3A3.
**Fan unit not suitable for SCE9x6 and SCE9x7. (These devices have built-in fan for 115 or 230 $V_{AC}$ )**

# 5 CE Approval, EC conformity

The CE initials confirm that our products in the SCE series satisfy all the requirements of the EC regulations relevant at the time of the test.

The device is not ready for service unless additional equipment is installed (cable, motor, etc.).
The tests needed for the purpose of CE certification were carried out on a typical application. The test installations to which the Declarations of Conformity refer are shown in the illustrations on pages 35ff. All peripheral installations as well as the results of the tests and measurements were recorded in detail. The relevant documentations are available from us on request.
If the method of connection in your machine differs from that of the test installations, and/or if components other than those documented are used, we cannot guarantee compliance with the disturbance limits.

In our Declaration of Conformity we confirm compliance with guidelines 73/23/EEC (Low Voltage Directive) and 89/336/EEC (EMC Directive).
The SCE9x6 was tested later than the smaller drives of the series. The SCE9x6 could not be added to the existing Declaration of Conformity for the SCE9x3 / 9x3A3 / 9x4 / 9x5 because a new regulation was issued.
However, the existing Declaration of Conformity for the SCE 9x3 / 9x3A3 / 9x4 / 9x5 stays valid for these drives. No new declaration has to be made for them.

For the SCE9x6 and 9x7, EMC testing was done according to EN61800-3 (Emission limits according to section 6.3.1 of that regulation – First environment / restricted distribution).

If our product is incorporated in a machine, it may not be put into service (i.e. started up for intended use) until it is established that the end product conforms to guideline 89/392/EEC (Machine Directive), and that everything complies with EMC guideline 89/336/EEC.

It is the responsibility of the machine manufacturer to prove that the total system conforms to the relevant European regulations.

Compliance of our products with the standards listed is documented in the Declarations of Conformity on the next pages.


Eduard BAUTZ GmbH + Co.KG, D-64331 Weiterstadt, Tel. +49-6151-8796-10, Fax +49-6151-8796-123

# EC DECLARATION OF CONFORMITY

This is to certify that

EDUARD BAUTZ Antriebstechnik GmbH
Robert-Bosch-Straße 10
64331 Weiterstadt

declares that their products:

| | |
|---|---|
| Designation | *SERVO DRIVES* |
| Type | *SCE903, SCE933, SCE903A3, SCE933A3, SCE904, SCE934,SCE905, SCE935* |

comply with the following relevant regulations:

| | | |
|---|---|---|
| EC Guideline | *89/336/EEC* | *Electromagnetic Compatibility* |
| *Applied harmonized standards:* | | *EN 50081.2 Parts 1.1. and 1.2.*<br>*EN 50082.2 Parts 1.1.,1.2.,1.4.,2.1.,2.2.,3.1.,3.2.,5.1.,5.2.,6.1.* |
| EC Guideline | *72/23/EEC* | *Low Voltage Directive* |
| *Applied harmonized standards:* | | *EN 60204.1, prEN 50178* |
| *Applied national standards* | | *VDE 0160* |

| | |
|---|---|
| Issued by: | BAUTZ Antriebstechnik GmbH<br>Dipl.-Ing. Norbert Witsch |
| Place, Date: | Weiterstadt, 22.08.1997 |
| Legally binding signature | |

Managing Director:
Dipl.-Ing. Norbert Witsch

Company registered in Darmstadt No.: 8 HRB 1045
Head Office: 64331 Weiterstadt

# EC DECLARATION OF CONFORMITY

This is to certify that

EDUARD BAUTZ Antriebstechnik GmbH + Co.KG
Robert-Bosch-Straße 10
64331 Weiterstadt
Germany

declares their products:

| | |
|---|---|
| Designation | *SERVO-DRIVE* |
| Type | *SCE906, SCE936* |

comply with the following relevant regulations:

| | | |
|---|---|---|
| EC Guideline | *89/336/EEC* | *Electromagnetic Compatibility* |
| *Applied harmonized Standards:* | | *EN61800-3* |
| EC Guideline | *72/23/EEC* | *Low Voltage Directive* |
| *Applied harmonized Standards:* | | *EN 60204.1, EN 50178* |
| *Applied national Standards* | | *VDE 0160* |

| | |
|---|---|
| Issued by: | BAUTZ Antriebstechnik GmbH + Co.KG<br>Dipl.-Ing. Norbert Witsch |
| Place, Date: | Weiterstadt, 24.11.1998 |
| Legally binding signature | |

Geschäftsführer:
Dipl.-Ing. Norbert Witsch

Handelsregister Darmstadt Nr.: HRA 6460
Sitz: 64331 Weiterstadt



Eduard BAUTZ GmbH + Co.KG, D-64331 Weiterstadt, Tel. +49-6151-8796-10, Fax +49-6151-8796-123

# EC DECLARATION OF CONFORMITY

This is to certify that

EDUARD BAUTZ Antriebstechnik GmbH + Co.KG
Robert-Bosch-Straße 10
64331 Weiterstadt
Germany

declares their products:

| | |
|---|---|
| Designation | *SERVO-DRIVE* |
| Type | *SCE9x7x2* |

comply with the following relevant regulations:

| | | |
|---|---|---|
| EC Guideline | *89/336/EEC* | *Electromagnetic Compatibility* |
| *Applied harmonized Standards:* | | *EN61800-3: 1997-08* |
| EC Guideline | *72/23/EEC* | *Low Voltage Directive* |
| *Applied harmonized Standards:* | | *EN 60204.1, EN 50178: 1998-04* |
| *Applied national Standards* | | *VDE 0160* |

| | |
|---|---|
| Issued by: | BAUTZ Antriebstechnik GmbH + Co.KG<br>Dipl.-Ing. Norbert Witsch |
| Place, Date: | Weiterstadt, 28.08.2000 |
| Legally binding signature | |

Geschäftsführer:
Dipl.-Ing. Norbert Witsch

Handelsregister Darmstadt Nr.: HRA 6460
Sitz: 64331 Weiterstadt

# 6 Qualified Personnel

This manual is intended for equipment and machinery manufacturers' personnel who are involved in planning, installation and maintenance, and who possess special knowledge in the field of motor drive applications.
Such personnel require detailed knowledge of the necessary connections for drives and how to incorporate them into a complete machinery installation.

Qualified personnel are persons who

- as planning personnel are familiar with the safety guidelines of electrical and automation technology,
- as installation personnel are authorized to install, ground and label power circuits, equipment and systems in accordance with the relevant safety technology standards,
- as maintenance personnel are specially trained in dealing with equipment relating to automation technology.

Planning, installation and maintenance by unqualified personnel can result in serious damage to machinery and drives, or even lead to serious physical injury!

⇒ **Planning , installation and maintenance must therefore only be carried out by appropriately qualified personnel!**
**Such personnel must be in a position to recognize the risks and dangers that can arise from mechanical, electrical or electronic equipment!**

Certainly our technicians can assist you when you put your drive into service for the first time. On request we will also train your personnel.
Please contact your local distributor or BAUTZ for further information (Tel.: +49-61 51- 87 96- 10).

# 7 Mechanical Installation

## 7.1 Installation, Space Requirements, Ventilation

**Installation site**

The devices are intended for fixed, i.e. stationary connection.

For the SCE9x3, SCE9x3A3, SCE9x4 or SCE9x5 applies:
When mounted accessibly, i.e. not in a closed installation cabinet, the 4 Phoenix plug-in screw terminals on the basic device must be fitted with a cover in order to comply with the regulations on protection against the risk of touching.

For the SCE9x6 and SCE9x7 applies:
These drives have fix screw terminals for J1, J2 and J5 instead.
For protection against accidental contact with voltages, SCE9x6 and SCE9x7 must always be mounted inside an installation cabinet.

All SCEs must be installed in a vertical position.

**Large-surface grounding**

**To assure large-surface grounding, remove the paint from the panel of the installation cabinet where the mounting side of the SCE drive contacts the panel.** This helps suppressing high frequency radiation.

**Grounding clamps**

**Provide a grounded bar fitted with metal grounding clamps close to the drive. Utilize the clamps for large-surface grounding of the cable shielding..**
For details see section 8.2 - CE-Compliant Installation – on page 32.

**Space requirements**

Provide at least 100 mm clearance above and below all SCEs.

**SCE9x3A3:**
Provide at least 40 mm clearance between neighboring devices.

**SCE9x3, SCE9x4, SCE9x5:**
Devices with fans can be mounted directly side by side.
Provide at least 40 mm clearance between neighboring devices without fans.

**SCE9x6, SCE9x7:**
Provide at least 40 mm clearance laterally and between the devices. Keep air inlets free.

After consultation with our application department deviations from the clearances given here may be acceptable in certain cases.

**Ventilation**

The air around the device must be free from corrosive gas and dust, especially conductive dust and metal filings. Fit a filter in the air duct to the installation cabinet. The installation cabinet ventilation must be capable of extracting dissipated heat.

For one SCE9x6 at rated power calculate 600 W of heat dissipation, assumed the regeneration circuit is active from time to time.

For one SCE9x7 at rated power calculate 600 W of heat dissipation as well. To calculate the heat produced additionally in the external regeneration resistor, the application specific load cycle must be considered.

Take note of the section in chapter 2.1 - General Technical Data - which deals with permitted environmental conditions and remember the power reduction due to high ambient temperatures.

**Practical hints:**

- Air inlet temperature at the SCE9x6 and SCE9x7 must be below 50 °C
- Do not mount an SCE above an other one.
- Do not mount an SCE above other heat sources. The upper device will be ventilated with too hot air.
- SCEs have air vents on top and below, SCE9x6 and SCE9x7 on the right side as well.
  These air vents must not be covered – not even partly – by cable channels, cables or other components.

## 7.2 Dimensions SCE9x3A3

All dimensions given in millimeters.

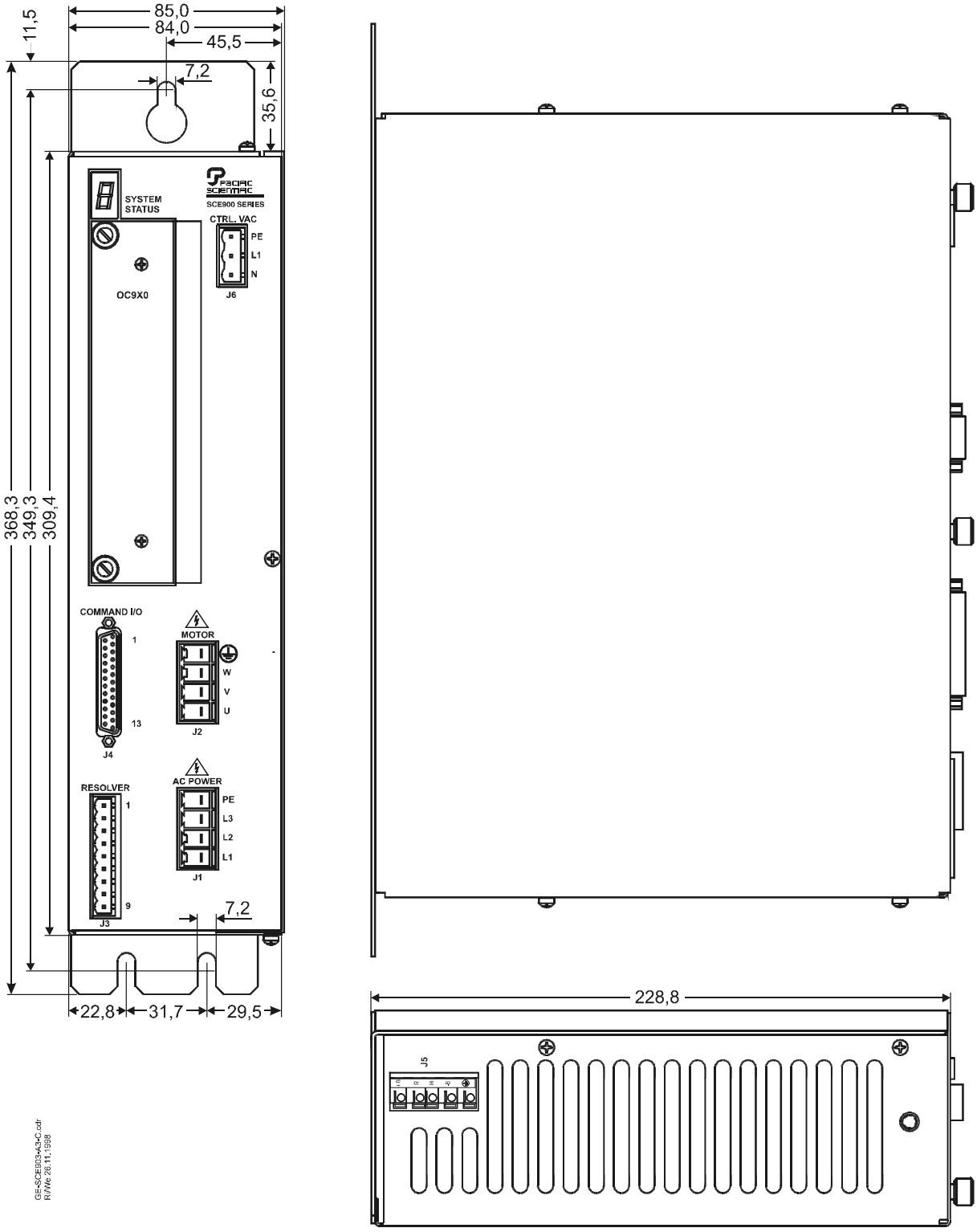



Eduard BAUTZ GmbH + Co.KG, D-64331 Weiterstadt, Tel. +49-6151-8796-10, Fax +49-6151-8796-123

## 7.3 Dimensions SCE9x3 and SCE9x4

All dimensions given in millimeters.

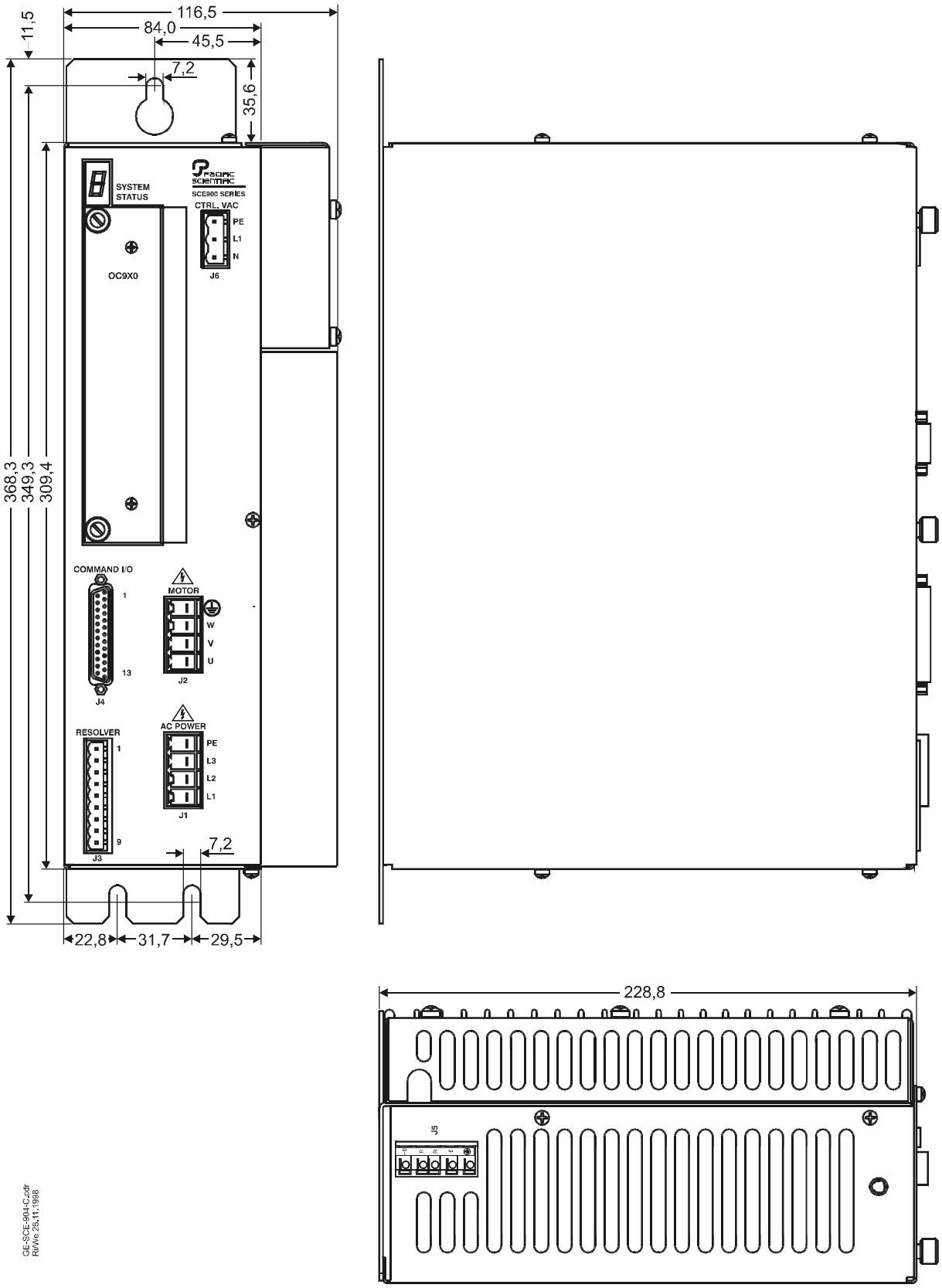

## 7.4 Dimensions SCE9x5

All dimensions given in millimeters.

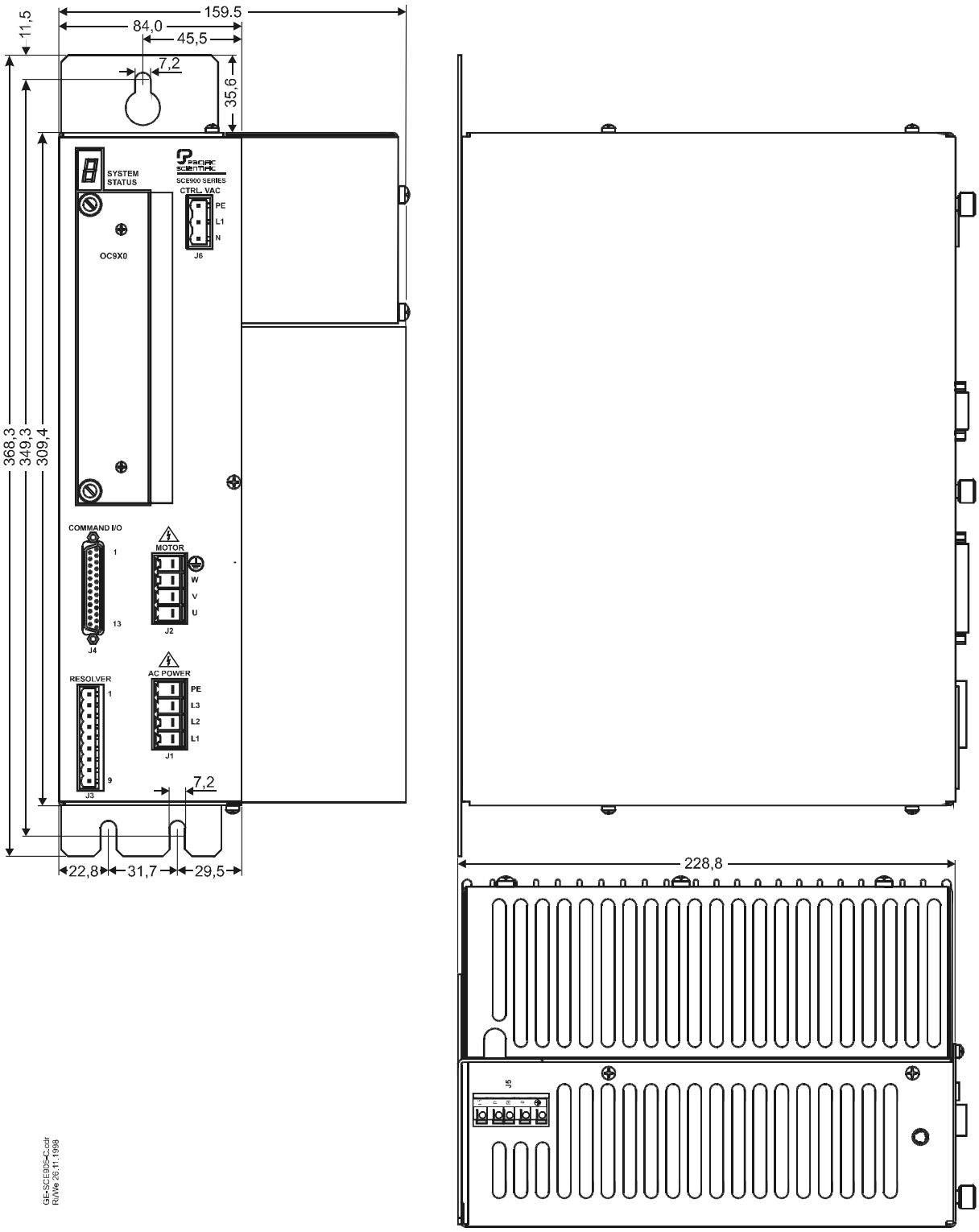



Eduard BAUTZ GmbH + Co.KG, D-64331 Weiterstadt, Tel. +49-6151-8796-10, Fax +49-6151-8796-123

## 7.5 Dimensions SCE9x6

All dimensions given in millimeters.

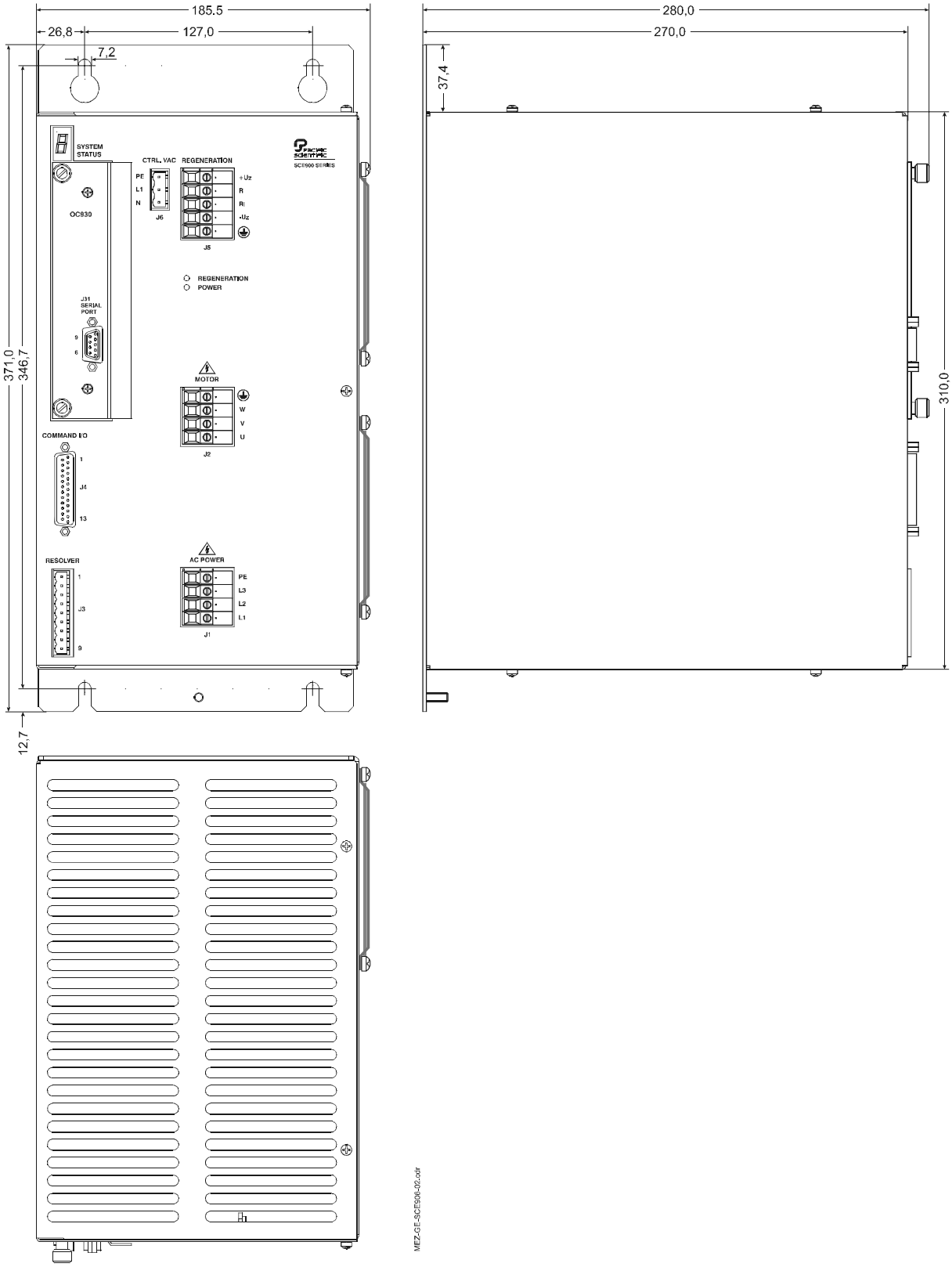

## 7.6 Dimensions SCE9x7

All dimensions given in millimeters.

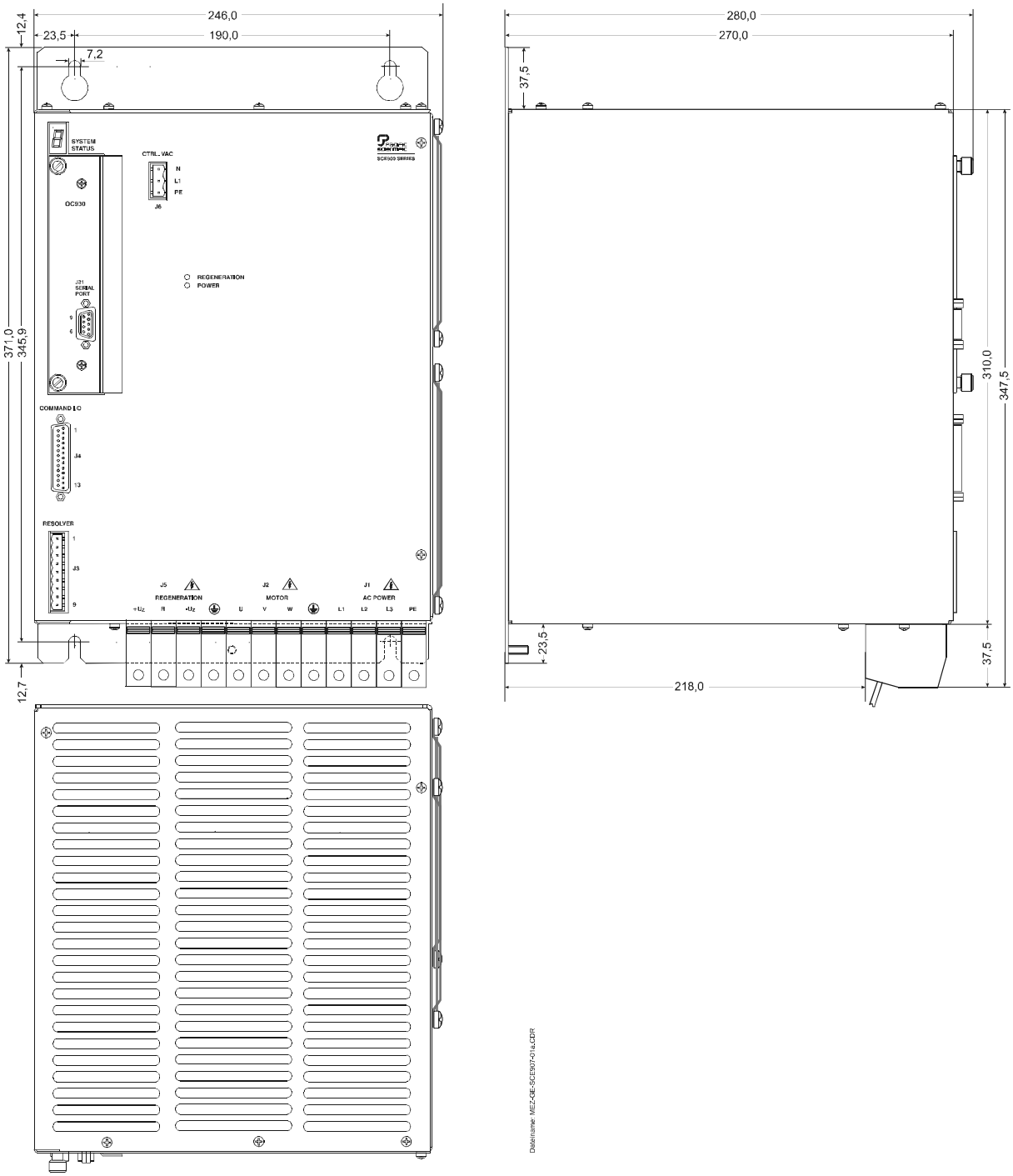



Eduard BAUTZ GmbH + Co.KG, D-64331 Weiterstadt, Tel. +49-6151-8796-10, Fax +49-6151-8796-123

# 8 Electrical Connection

## 8.1 Safety

### 8.1.1 Safety Instructions

During installation it is essential to comply with relevant European guidelines and standards, as well as with the regulations of the VDE (Verband Deutscher Elektrotechniker) and all accident prevention regulations. The points listed below are particularly applicable. The list does not claim to be exhaustive.

- VDE 0100 (Erection of power installations with rated voltages below 1000 V).
- DIN – EN 60 204 – Part 1, which is VDE 0113, Part 1 (Safety of machinery – Electrical equipment of machines).
- DIN EN 50178, which is VDE 0160 (Electronic equipment for use in power installations).

Please read and take every care to comply with the safety and operating instructions in Appendix 3 of this manual, and keep them in a safe place.

### 8.1.2 Warnings

**These items can put you in danger from an electric shock:**

- **Cable shielding:**
  **<u>Ungrounded</u> shielding on motor cables and where appropriate the inner shielding for the wiring to a holding brake**, as well as shielding on the line to an external regeneration resistor; these carry cross-coupled voltages that are dangerous if touched.
- **Casing and protective conductor connection:**
  If the protective conductor comes loose when a device is operating, dangerous voltages will be present due to mains filter capacitors and shielding leakage.
- **Plugin screw terminals:**
  When the cover is off, it is possible to touch live parts.
- **When opening a servodrive that has just been switched off - WAIT!!!**
  The discharge time for a bus capacitor carrying $600V_{DC}$ can be as much as 5 minutes.

**Danger from arcing:**

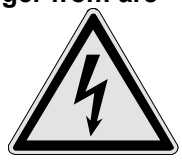

- **Connectors and plugin screw terminals:**
  Never unplug a motor or device whilst it is switched on.
- **Screw terminals:**
  All devices must be turned off before clamping or unclamping lines to screw terminals.

**Danger from hot surfaces:**

- **The servodrive:**
  Near the heat sink and regeneration resistor, the surface temperature of the device may exceed 70°C. These areas could cause a burn if touched.
- **The casing on an external regeneration resistor.**
- **The casing on the servomotor.**

### 8.1.3 Special Regulations

**Suitable power systems for supply voltage:**

**CAUTION**

**SCE Series Servo Drives must only be operated on <u>symmetrically grounded</u> three phase industrial power systems ( TN-system, TT-system with earthed neutral point, ANSI: WYE-system).**
**The servo amplifiers must not be operated on power supply networks without an earth or with an asymmetrical earth.**

Non-compliance may cause damage to the drive.

**Shielding must be grounded:**

In order to prevent the risk of a shock hazard from cross-coupled voltages due to cable capacitance:

- **The shielding on the motor lead must be connected to the protective conductor via J2, as well as to the grounding clamp near the servodrive.**
- **The inner shielding on wiring for a holding brake included in the motor cable must be grounded.**
- **The shielding on the lead to an external regeneration resistor must be grounded.**
- **The casing of an external regeneration resistor must be connected to the protective conductor via J5, the protective conductor terminal.**

**Provisions concerning leakage current in the PE line:**

The filter leakage current to the protective conductor from the filter built into the device is 15 mA or more. Leakage currents also come from the motor cable shielding.
In accordance with DIN EN 50178, section 5.2.11.1 ff, with filter leakage current in excess of 3.5 mA the following provisions apply:

- **The SCE is only designated for connection in a fixed (i.e. static) location.**
- In order to maintain personal protection against electrical shock from leakage currents in case of an interruption of a PE connection, **the SCE must be connected to the PE (Protective Earth) rail in the installation cabinet by two <u>separate</u> lines via the earth ground stud and via J1, terminal PE.** Feeding a short jumper wire in front of the drive and leading only one wire from there to the PE rail of the cabinet is not allowed. Otherwise the risk of damage or personal injury cannot be prevented.
- The use of a residual current operated device (=ground fault circuit-interrupter) <u>alone</u> is prohibited.
  If a **residual current operated device** is utilized, **type B only** (all-current sensitive, for AC fault current and pulsating and stepless DC fault current) is permitted. Residual current operated devices with a sensitivity of less than 300 mA are unsuitable.

**Installation without a cabinet**

With the SCE9x3/9x3A3/9x4/9x5 applies:

- **As a safety measure against the dangers of touching, covers are obligatory for the 4 plugin Phoenix screw terminals J1, J2, J3 and J6, if the device is not installed inside a cabinet.** See page 14.

**For protection against accidental contact with voltages the SCE9x6 and SCE9x7 must be mounted inside a lockable installation cabinet.**


Eduard BAUTZ GmbH + Co.KG, D-64331 Weiterstadt, Tel. +49-6151-8796-10, Fax +49-6151-8796-123

**Safe isolation**

When working on the machine or within its sphere of operation, it is essential to insure safe isolation in accordance with DIN EN 50178 (=VDE 0160)

- **Turn off the power supply to J1.**
- **Removing the Enable signal does not count as safe isolation.**

**Reset**

- Before resetting an error by using the Fault Reset input, or before using the `FaultReset` command, remedy the cause of the fault and make sure that no danger can arise from resetting.

### 8.1.4 Preventing Damage

**to the motor**

**The motor isolation must be nominally rated for a bus voltage of 560 $V_{DC}$ at least!**

**Preventing damage to the motor and drive:**

**An arc when cutting the power will burn the connections.**

- Never insert or remove a plug whilst the power is switched on.
- All devices must be turned off before clamping or unclamping lines to screw terminals.

**Fault output**

The use of fault output in a monitoring circuit on your machine increases operating safety.

**Never switch off and then on again right away.**

**With the SCE9x3, SCE9x3A3, SCE9x4 or SCE9x5 applies:**

**Make sure (with the aid of a PLC or a timing relay) that between power-down and power-up on J1 at least 3 minutes elapse.**

The NTC thermistors in the soft startup circuit need this time to cool down.

For technical reasons it is necessary that the NTCs being used should cool down. If you find that:

- 3 minutes waiting time is not practicable in your application,
- you use the SCE in a high ambient temperature (>40 °C),

please read the Application Note called "Inrush current limitation" in Appendix 2 of this manual.

**With the SCE9x6 and SCE9x7 applies:**

**Make sure (with the aid of a PLC or a timing relay) that between power-up and the next power-up on J1 at least 30 s elapse.**

If the resistors used for limiting the inrush current get too hot, they may burn through.

Non-compliance may cause mains fuses to blow, a contactor connected in series will be overloaded and its contacts may stick.

**Safety-related in the event of an emergency stop.**

## 8.1.5 Emergency Stop – Procedure

**Emergency stop**

**This situation is governed by the regulations about accident prevention of your country.**

**Check the relevant regulations on the matter to see whether a brake has to operate independently of the drive in the event of an emergency stop.**

**Your external position controller should also interpret the fault output.**

**General provisions:**
**In the event of an emergency stop the equipment and at least the input power supply to J1 on the drive must be switched off. Activate both limit switch inputs at the same time.**

When the control power supply to J6 is switched off, the device will continue to operate for a short time until a fault in the control power supply is detected.
If just the input power supply to J1 is switched off, the device will continue to operate when the power is interrupted until the voltage in the DC bus falls to a level at which it no longer regulates the motor.

The control power supply is electrically insulated from the input power supply. The requirements for a "safe isolation“ in accordance with EN 50178 are met.

**This means that in the event of an emergency stop the control power supply can remain on J6.**

This is often an advantage since:
1. The encoder simulation stays active.
2. You can brake with the aid of the drive.

---

**Function**

If both limit switch inputs are activated at the same time as switching off the power to J1 only, the motor will be braked at the current limits set by ILmtPlus and ILmtMinus, provided no drive fault occurs. The energy generated by braking will at first maintain the bus voltage in the drive. The bus voltage then collapses.

The standard factory setting is:

**If the input power supply to J1 fails, the brake does not cut in.**

The default "`VBusThresh`“ parameter is -1 V, so no fault message is triggered and the brake output does not switch to LOW.

This is for the following reasons:
1. There are no fault messages with any power up sequence.
2. The level of the input power supply remains variable.

If you wish to change this:

- It is best to set the "VBusThresh“ parameter to a meaningful bus voltage which will trigger a fault message if voltage drops below the threshold. If fault messages occur, the "Brake“ output becomes LOW.


Eduard BAUTZ GmbH + Co.KG, D-64331 Weiterstadt, Tel. +49-6151-8796-10, Fax +49-6151-8796-123

If the coupled moment of inertia and the energy of rotation are too high during braking, the drive switches off with fault I×t before the load has come to rest. The motor gradually slows to a halt.

Bear in mind that active braking by the actuation of limit switch inputs will only operate if the drive is intact, enabled, and not reporting a fault. If the drive is disabled (externally or due to an internally detected fault), the following applies:

1. Motor current no longer flows, not even for braking;
   The "Brake" output is activated.
2. If the motor is still rotating it slows to a halt with no internal braking force.

**In order to protect personnel and equipment, it is often a requirement that the motor should be brought quickly to a standstill in the event of a drive fault. In this case, external braking is the only possibility.**

**Resistance braking**

This can be provided by a mechanical brake or by electrical resistance braking. With resistance braking, the braking effect depends on the rotation speed. If you need to know more, please ask us for the BAUTZ Application Notice on the subject of "Resistance braking“. The following always applies:
**The motor lead of the active drive must never be interrupted by a contactor or by other means.**
Interrupting the current flowing in an inductance causes high voltage spikes. Arcing may damage the contacts and overvoltage may damage the drive.

**Holding brakes**

**Our M, F and W series AC servomotors can be delivered with brakes as an option. These are suitable (within limits) for braking the motor in an emergency stop. If necessary ask for our Application Note "Motor brakes".**

Exception:

Motor **holding** brakes are built into **F634x-B and F804x-B motors only**. These brakes can hold a motor stationary, i.e. stop the load from moving or dropping when the motor is idle. They are not suitable for braking at full speed under load. **A working brake or a resistance braking circuit must also be fitted.**

You can also use hardwiring to insure that if the input power supply to J1 fails, the drive is deactivated and the holding brake and/or resistance braking circuit will cut in.

**Restarting**

**WARNING:**

**Unlocking the emergency stop equipment must not cause the motor to start up in an uncontrolled fashion.**

**Remember to comply with the 3 minute recovery time for soft startup. SCE9x6 and SCE9x7: 30 seconds between one power-up and the next.**

## 8.2 CE-Compliant Installation

Unfortunately it is not possible to show a wiring diagram for the SCE that covers every possible application. Our customers' machines are too diverse for this. The diagrams of the EMC test rigs on pages 35f and the connection diagram on page 34 are a useful guide. In general the following applies:

**Provide grounding clamps:**

- **Provide a grounded bar fitted with metal grounding clamps close to the drive. This will be used for large-surface grounding of the cable shielding. For this purpose remove a short length of the outer insulation from the shielded cables leading to the SCE (approx. 10 mm), and place the shield under one of the metal clamps. The remaining cable length from the clamp to the SCE should be less than 1 meter. Be sure to extend the shielding as far as the front of the terminals on the drive. Even short unshielded sections of the motor lead will act as radiating antennas for HF interference.**

The following items among others are suitable for the shielding bar:
from Phoenix Contact: terminals SK14, bar NLS-Cu 3/10, foot AB/SS-M;
from Weidmüller: shielding clamps KLBÜ.

**Shielding:**

- Leads for the motor, the resolver and the control cables must be shielded. Shielding should be grounded at both ends if possible, or at the drive end, to the bar described above. In the case of the motor lead, the shielding at the drive end must also be hooked up to J2, terminal “protective conductor”.

- The resolver cable must contain twisted pairs. Each pair should be shielded, in addition to the general shielding. Connect the inner, twisted pair shielding for the resolver cable to J3, terminal 5, at the drive end only Isolate them at the motor end. For the external shielding connections, see above.

**Large-surface grounding**

**To assure large-surface grounding, remove the paint from the panel of the installation cabinet where the mounting side of the SCE drive contacts the panel.** This helps suppressing high frequency radiation.

**Recommendations**

- We recommend the use of installation material in accordance with chapter 4.

- Be sure to comply with all instructions in the following sections regarding measures to be taken in the course of CE compliant installation, especially with regard to the strict requirements for HF immunity and suppression.

- **We recommend that you request two free Application Sheets from the Schaffner company:**

  1. ***"Installation guidelines for resolving EMC problems in motor drive applications when using frequency inverters"***
     and
  2. ***"Output filters for use with frequency inverters in motor drive applications"***


Eduard BAUTZ GmbH + Co.KG, D-64331 Weiterstadt, Tel. +49-6151-8796-10, Fax +49-6151-8796-123

In the first brochure, the part called "Installation instructions“ contains guidance on grounding, shielding, filtering and various other procedures. The part called "Technical analysis“ lists the relevant standards and laws.
It deals with practical problems and their solutions, safety engineering aspects, and the choice of filter. Each of our devices is fitted with an internal mains filter. However, if the motor cable is over 10 meters long or there are multiaxis applications, the sum total of all mains interference may make an external filter necessary.

The second brochure deals with motor filtering and motor reliability. The SCE does not need motor filters if the motor cable is less than around 50 meters long.

The following provisions always apply – even when using a filter in the motor lead:
If the motor cable is over 10 meters long, you must limit maximum drive output power during installation. For further information refer to the section called "Reducing output power“ on page 49.

These publications may be obtained from Schaffner Elektronik GmbH, Schoemperlenstr. 12B, D-76185 Karlsruhe, Tel.: +49 721 5691 0, Fax: +49 721 5691 10.

Similar mains filters may also be obtained of course from Siemens, Block, Spoerle Elektronik, and many other companies.

You will find recommendations on what filter and line reactor to choose in which application in section 8.6 - Input Power Supply – on page 44.

## 8.3 Connection Diagram

A schematic circuit diagram appears below. The actual structure is shown more clearly on the next pages. It is essential to ground the cable shielding to the grounding clamps.

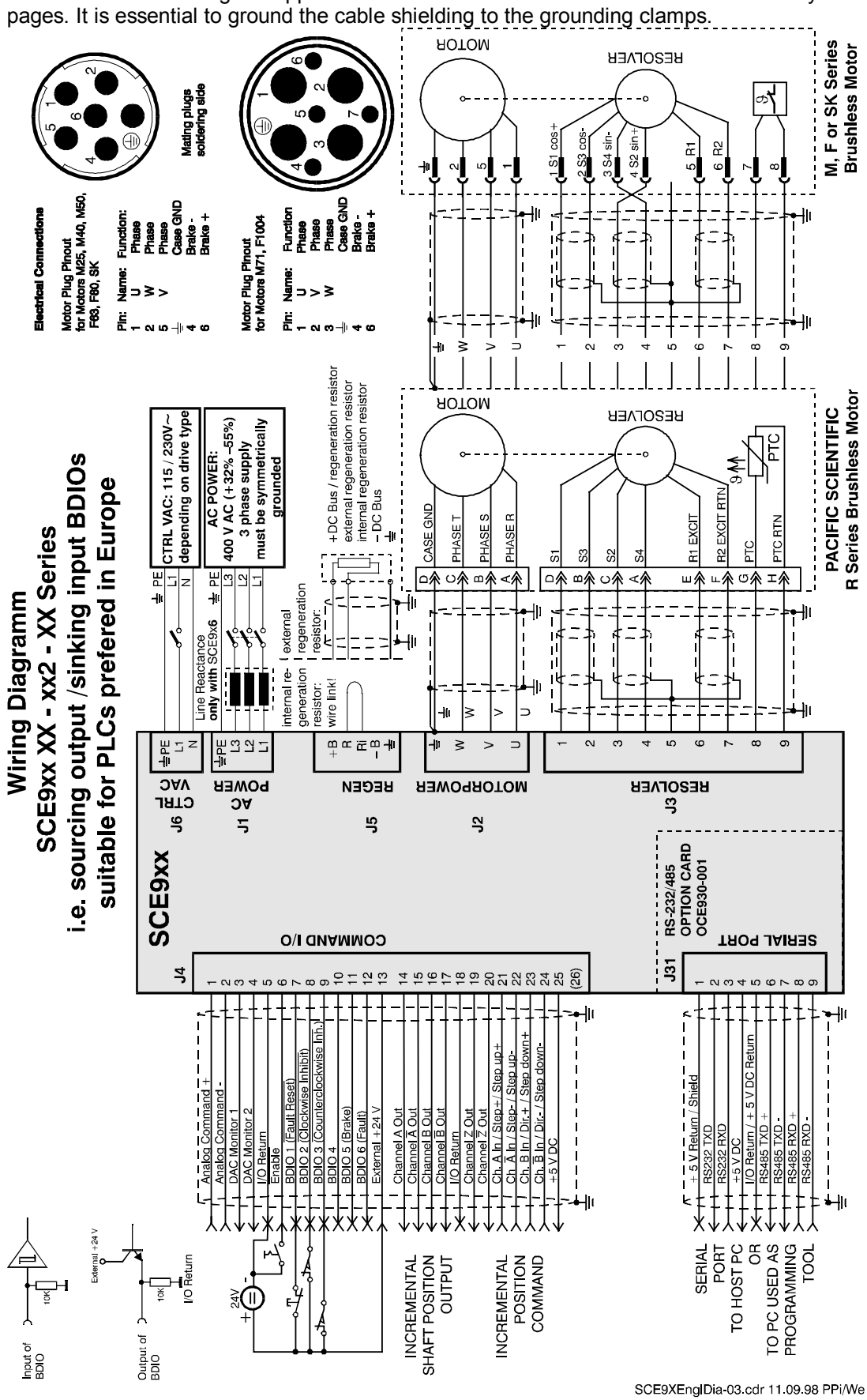

## 8.4 Shielding and Grounding

### 8.4.1 EMC- Test Installation for SCE9x3 / SCE9x3A3 / SCE9x4 / SCE9x5

For shielding and grounding we recommend that you follow the example of this fully tested and documented EMC test installation we used with the SCE9x3A3, SCE9x3, SCE9x4 and SCE9x5:

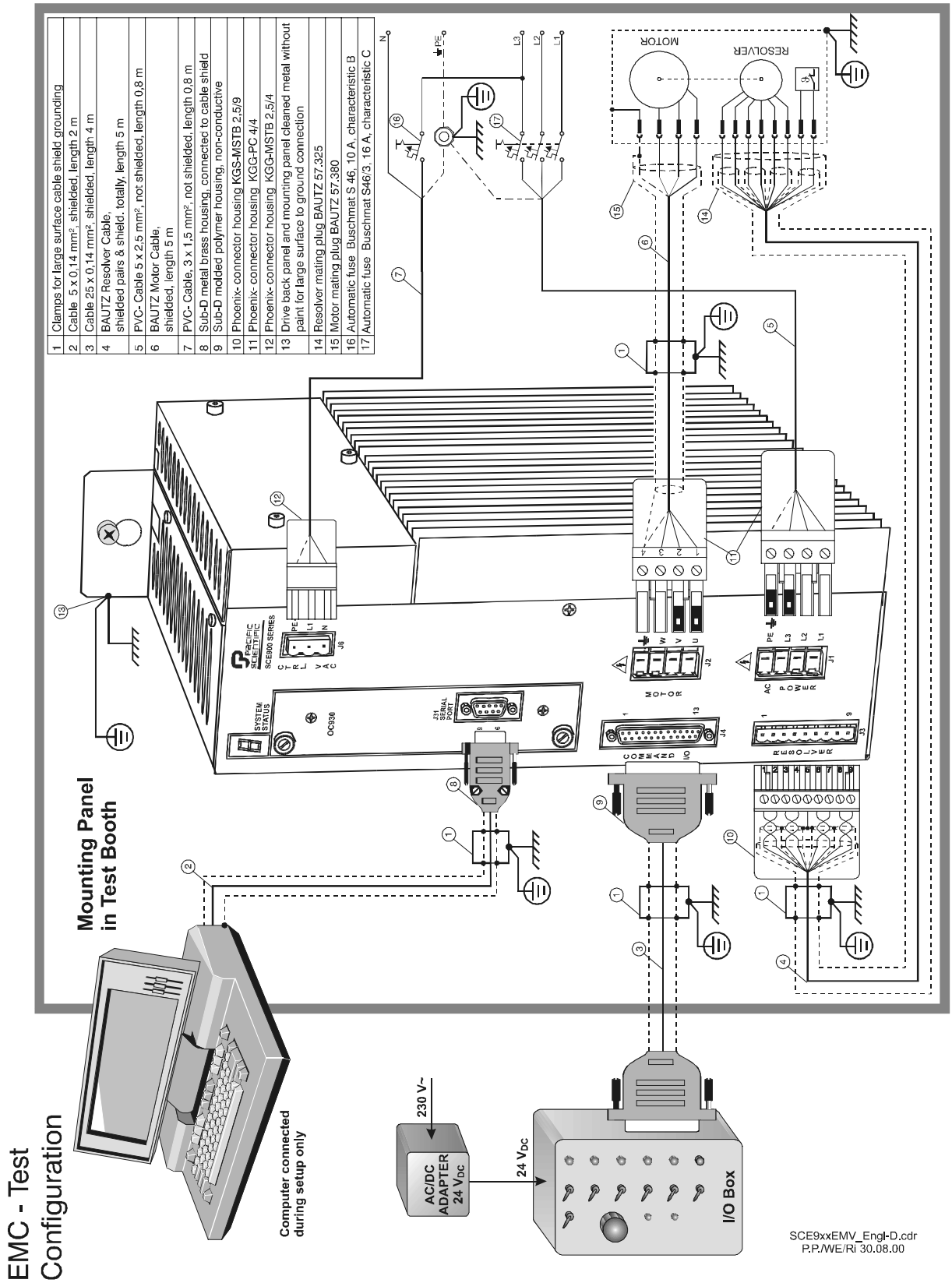

## 8.4.2 EMC- Test Installation for SCE9x6 / SCE9x6-2

With the SCE9x6 and SCE9x6-2, the EMC test installation was slightly different:

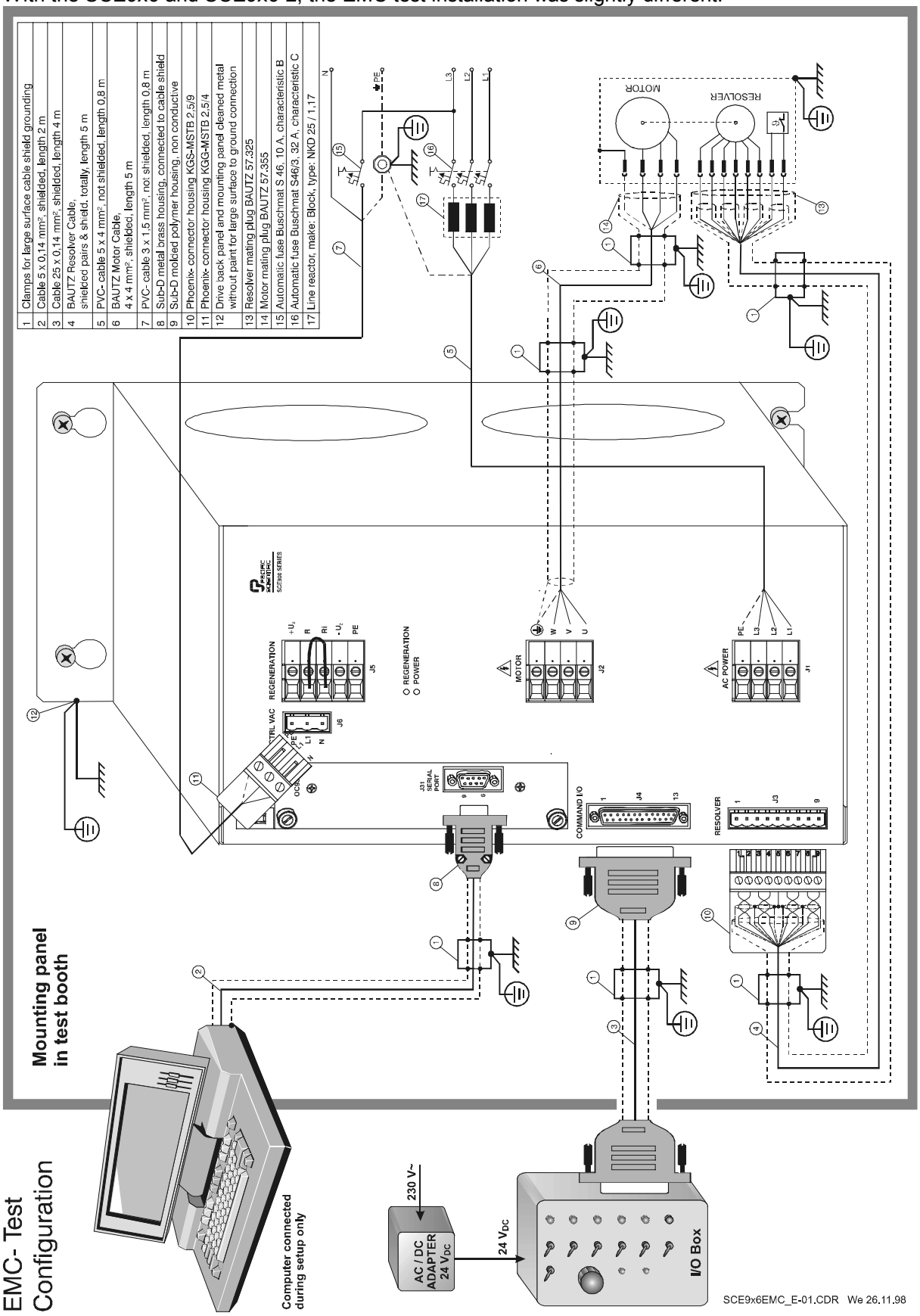



Eduard BAUTZ GmbH + Co.KG, D-64331 Weiterstadt, Tel. +49-6151-8796-10, Fax +49-6151-8796-123

## 8.4.3 EMC- Test Installation for SCE9x7

With the SCE9x7, the EMC test installation was slightly different:

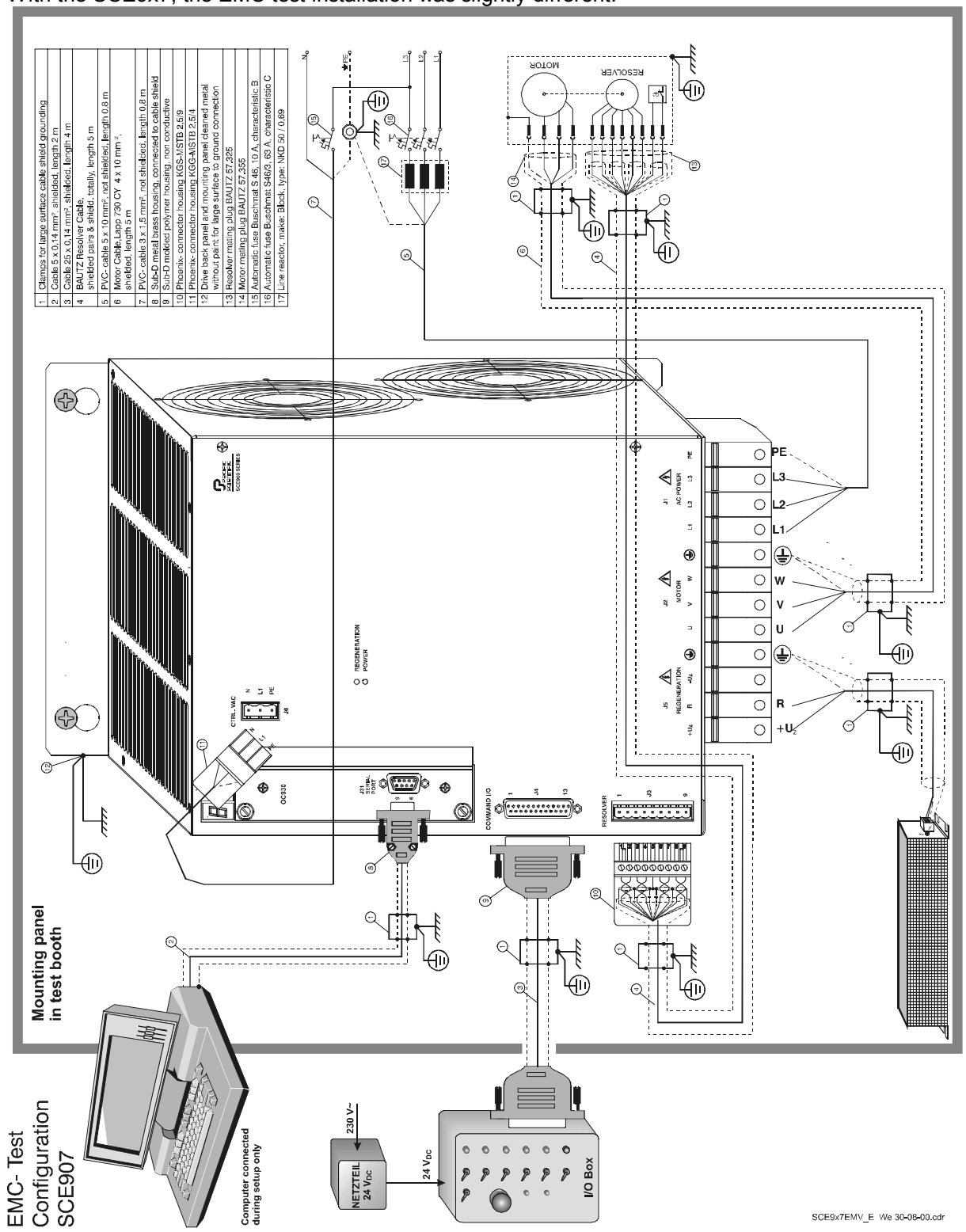

# 8.5 I/O Terminals

## 8.5.1 SCE900 Power Connections

**J1:**
**AC POWER**
***Main power supply***

Plugin screw terminal block in 7.62 mm grid (Phoenix PC4/4-ST-7,62, coded);
SCE9x6 and SCE9x7 only: Screw terminals, non-pluggable.

| | |
|---|---|
| Terminal L1 | Mains connection, 400 V (+32%, –55%) three-phase (input) |
| Terminal L2 | Mains connection, 400 V (+32%, –55%) three-phase (input) |
| Terminal L3 | Mains connection, 400 V (+32%, –55%) three-phase (input) |
| Terminal PE | PE connection |

**J6:**
**CTRL. VAC**
***Control power supply***

Plugin screw terminal block in 7,5 mm grid (Phoenix GMSTB2,5/3-ST).

| | | |
|---|---|---|
| Terminal L1 | \ | 230 $V_{AC}$ (+10%, –55%)[1] control power supply |
| Terminal N | / | between terminals L1 and N (inputs) |
| Terminal PE | | PE connection |

**J2:**
**MOTOR**
***Motor connection***

Plugin screw terminal block in 7.62 mm grid (Phoenix PC4/4-ST-7,62, coded);
SCE9x6 and SCE9x7 only: Screw terminals, non-pluggable.

| | Series M, F and W motor | Series R motor |
|---|---|---|
| Protective conductor terminal | Motor protective conductor | Motor protective conductor |
| Terminal U | Motor phase U | Motor phase R |
| Terminal V | Motor phase V | Motor phase S |
| Terminal W | Motor phase W | Motor phase T |

**J5:**
***Regeneration resistor and bus voltage***

Terminal block on top of SCE9x3 / -9x3A3 / -9x4 / -9x5,
resp. on front side of SCE9x6, resp. on bottom side of SCE9x7

| | |
|---|---|
| Terminal +B | + DC bus or regeneration resistor (output) |
| Terminal R | Regeneration resistor (output) |
| Terminal Ri | Internal regeneration resistor (input) (not provided on SCE9x7) |
| Terminal –B | – DC bus (output) |
| Terminal Protective Conductor | External regeneration resistor housing |

An isolated wire link is fitted by factory between terminals R and Ri, thus connecting the drive's internal regeneration resistor to the regeneration circuit output. The other end of the internal regeneration resistor is hard wired to +B internally.
If necessary, an external regeneration resistor can be connected between terminals +B and R. In this case, the link between terminals Ri and R must be removed. See 8.3 – Connection Diagram – on page 34.

On the SCE9x7 no internal regeneration resistor is provided. With the SCE9x7, always connect an external regeneration resistor between terminals +B and R.

[1] With the **SCE9x6 / SCE9x6-2 / SCE9x7** the wide range capability of the control power supply input can not be utilized, because this AC voltage feeds built-in fans, witch need defined voltages. Two variants of **SCE9x6** (obsolete soon) can be ordered ex works

| | | |
|---|---|---|
| a) SCE9x6 x**2**-xxx-xx | for control voltage supply = 230 V +/- 10% | f = 50...60 Hz |
| b) SCE9x6 x**1**-xxx-xx | for control voltage supply = 115 V +/- 10% | f = 50...60 Hz |

**SCE9x6-2 and SCE9x7** drives accept either 115 V (±10%) or 230 V (±10%) as control power supply. These drive types have a relay in order to switch the fans in series or parallel, dependent from control power supply level.


Eduard BAUTZ GmbH + Co.KG, D-64331 Weiterstadt, Tel. +49-6151-8796-10, Fax +49-6151-8796-123

## 8.5.2 Pin Assignment of the Resolver Connector

**J3:**
**RESOLVER**
***Motor feedback***

Plugin screw terminals, 9 pin, in 5.00 mm grid

| | |
|---|---|
| Pin 1 | Resolver S1 cos+ (input) |
| Pin 2 | Resolver S3 cos– (input) |
| Pin 3 | Resolver S2 sin+ (input) |
| Pin 4 | Resolver S4 sin- (input) |
| Pin 5 | Shielding, i.e. I/O Return, for internal shieldings of twisted pairs (connect external shielding by a clamp to grounding rail) |
| Pin 6 | Resolver R1 Excitation (output) |
| Pin 7 | Resolver R2 Excitation Return (output) |
| Pin 8 | Motor PTC (temperature sensor) (input) |
| Pin 9 | Motor PTC Return (input) |

## 8.5.3 Signal Assignment – I/Os

**J4:**
**COMMAND I/O**
***Command and I/Os***

A $\overline{\text{Bar}}$ over the designation of an I/O function in the section below means that the function concerned is active when LOW.

In the event of an automatic setup, the BDIOs (bidirectional I/Os) are assigned the functions shown in square brackets.

**25-pin Submin-D socket (connector):**

| | | |
|---|---|---|
| Pin 1 | Analog Command + (input) | |
| Pin 2 | Analog Command - (input) | |
| Pin 3 | Analog Monitor 1 (output) | |
| Pin 4 | Analog Monitor 2 (output) | |
| Pin 5 | I/O Return (GND from 24 V external) | |
| Pin 6 | $\overline{\text{Enable}}$ (input) | |
| Pin 7 | BDIO 1 [$\overline{\text{Fault Reset}}$] - BDIO | *At this point the* |
| Pin 8 | BDIO 2 [$\overline{\text{Clockwise Inhibit}}$] - BDIO | *factory* |
| Pin 9 | BDIO 3 [$\overline{\text{Counterclockwise Inhibit}}$] - BDIO | *default settings* |
| Pin 10 | BDIO 4 [OFF]- BDIO (register input 1) | *for BDIOs 1 to 6* |
| Pin 11 | BDIO 5 [Brake] - BDIO (register input 2) | *on pins 7 to 12* |
| Pin 12 | BDIO 6 [Fault] - BDIO | *are shown* |
| Pin 13 | + 24 V External | |
| Pin 14 | Output Encoder Channel A | |
| Pin 15 | Output Encoder Channel $\overline{A}$ | |
| Pin 16 | Output Encoder Channel B | |
| Pin 17 | Output Encoder Channel $\overline{B}$ | |
| Pin 18 | I/O Return / +5 $V_{DC}$ Return | |
| Pin 19 | Output Encoder Channel Z | |
| Pin 20 | Output Encoder Channel $\overline{Z}$ | |

| | Inputs : | alternative inputs: | alternative inputs: |
|---|---|---|---|
| Pin 21 | Encoder Channel A | (Step +) | (Step up +) |
| Pin 22 | Encoder Channel $\overline{A}$ | (Step –) | (Step up –) |
| Pin 23 | Encoder Channel B | (Direction +) | (Step down +) |
| Pin 24 | Encoder Channel $\overline{B}$ | (Direction –) | (Step down –) |

Pin 25 + 5 $V_{DC}$ (output)
(Term. 26) On optional terminal block adapter only: I/O Return

## 8.5.4 I/Os - OCE930 - Serial Communications Option Card

**J31: SERIAL PORT**
***Serial interface***

**9-pin Submin-D jack:**

| | |
|---|---|
| Pin 1 | Shielding / + 5 $V_{DC}$ Return |
| Pin 2 | RS232 TXD (output) |
| Pin 3 | RS232 RXD (input) |
| Pin 4 | + 5 $V_{DC}$ (max. 200 mA) (output) |
| Pin 5 | I/O Return / + 5 $V_{DC}$ Return |
| Pin 6 | RS485 TXD + (output) |
| Pin 7 | RS485 TXD – (output) |
| Pin 8 | RS485 RXD + (input) |
| Pin 9 | RS485 RXD – (input) |


Eduard BAUTZ GmbH + Co.KG, D-64331 Weiterstadt, Tel. +49-6151-8796-10, Fax +49-6151-8796-123

## 8.6 Input Power Supply

**Terminals J1: AC POWER**

***Input (or main) power supply***
400 $V_{AC}$ (+32%, –55%)
Power supply for bus and power stage.
PE connection: Connect two completely separate PE conductors on J1and J6 to the potential equalization bar in the installation cabinet. Do not bridge the PE from J1 to J6 by passing a jumper wire in front of the device.

**CAUTION**
**SCE Series Servo Drives must only be operated on <u>symmetrically grounded</u> three phase industrial power systems ( TN-system, TT-system with earthed neutral point, ANSI: WYE-system).**
**The servo amplifiers must not be operated on power supply networks without an earth or with an asymmetrical earth.**
Non-compliance may cause damage to the drive.

**Cables and fuses**

The feed lines for the input and control power supply do not need any shielding.

| Device | Input power cable cross-section | automatic cut-out, 3-pole breaking |
|---|---|---|
| SCE9x3A3 | 1.5 $mm^2$ | 10 A char. C |
| SCE9x3 | 1.5 $mm^2$ | 16 A char. C |
| SCE9x4 | 1.5 $mm^2$ | 16 A char. C |
| SCE9x5 | 2.5 $mm^2$ | 16 A char. C |
| SCE9x6 | 4.0 $mm^2$ | 32 A char. C |
| SCE9x7 | 10,0 $mm^2$ | 63 A char. C |

**Special considerations**

Due to the inrush current (for charging the bus capacitors) 16 A slow-acting fuses are to be used in the case of SCE9x3/4/5 regardless of motor power.

**Each of our drives has a built-in internal mains filter.** However, if the motor cable is over 10 meters long or if there are multiaxis applications, the sum total of all mains interference may make an external filter necessary.

**Residual current operated devices (=Ground fault circuit-interrupters) with a nominal breaking current of less than 300 mA are not to be used due to leakage current in the drive from the shielding and mains filter, and possibly also from a mains filter that may be serially connected. The following regulations therefore apply:**

- **The SCE is only designated for connection in a fixed (i.e. static) location.**
- In order to maintain personal protection against electrical shock from leakage currents in case of an interruption of a PE connection, **the SCE must be connected to the PE (Protective Earth) rail in the installation cabinet by two <u>separate</u> lines via the earth ground stud and via J1, terminal PE.** Feeding a short jumper wire in front of the drive and leading only one wire from there to the PE rail of the cabinet is not allowed. Otherwise the risk of damage or personal injury cannot be prevented.
- The use of a residual current operated device (=ground fault circuit-interrupter) <u>alone</u> is prohibited.
  If a **residual current operated device** is utilized, **type B only** (all-current sensitive, for AC fault current and pulsating and stepless DC fault current) is permitted. Residual current operated devices with a sensitivity of less than 300 mA are unsuitable.

**Restricted distribution**

**First environment**

**Second environment**

In regard to admissible emissions, regulation EN61800-3 (equals IEC1800-3) defines two different environments, where different emission limits are valid. You as design engineer or end user have to define, in which environment the SCE shall be utilized.

Definitions complying EN61800-3:

3.2 **restricted distribution:** Mode of sales distribution in which the manufacturer restricts the supply of equipment to suppliers, customers or users, who separately or jointly have the technical competence in the EMC requirements of the application of drives.
NOTE – For economical reasons, the partners should ensure the essential EMC protection requirements for the specific installation, by choice of suitable emission class, by measurement *in situ* with actual boundary conditions and by exchange of technical specifications.

3.3 **first environment:** Environment that includes domestic premises. It also includes establishments directly connected without intermediate transformers to a low-voltage power supply network which supplies buildings used for domestic purposes.

3.4 **second environment:** Environment that includes all establishments other than those directly connected to a low-voltage power supply network which supplies buildings used for domestic purposes.

Categorically, „restricted distribution“ applies for the SCE series drives.

---

**General information on line reactors for SCE9x6 an**

A line reactor is not necessary for the SCE9x3A3, SCE9x3, SCE9x4, SCE9x5.

If a SCE9x6 or SCE9x7 is utilized in the “First Environment”, a three-phase line reactor in the drive’s input power supply is necessary.
If a SCE9x6 or SCE9x7 is utilized in the „Second Environment”, a line reactor is recommended.

If a line reactor is utilized, place it near the SCE9x6 or SCE9x7, although 50 mm clearance to metal parts and adjacent devices is recommended.
(Due to the physically caused stray field.)
It is not necessary to use shielded power supply cables.

The 3-phase line reactors shown here are for three-phase consumers at a 400 V three-phase mains supply.
$U_K$ = 4%, voltage drop 9,2 V at $I_{rated}$
Rated ambient temperature is 40 °C. Line reactors get hot during operation.
Protection class: IP00.


Eduard BAUTZ GmbH + Co.KG, D-64331 Weiterstadt, Tel. +49-6151-8796-10, Fax +49-6151-8796-123

**Line reactor for SCE9x6**

BAUTZ order number 57.413:

Dimensional drawing

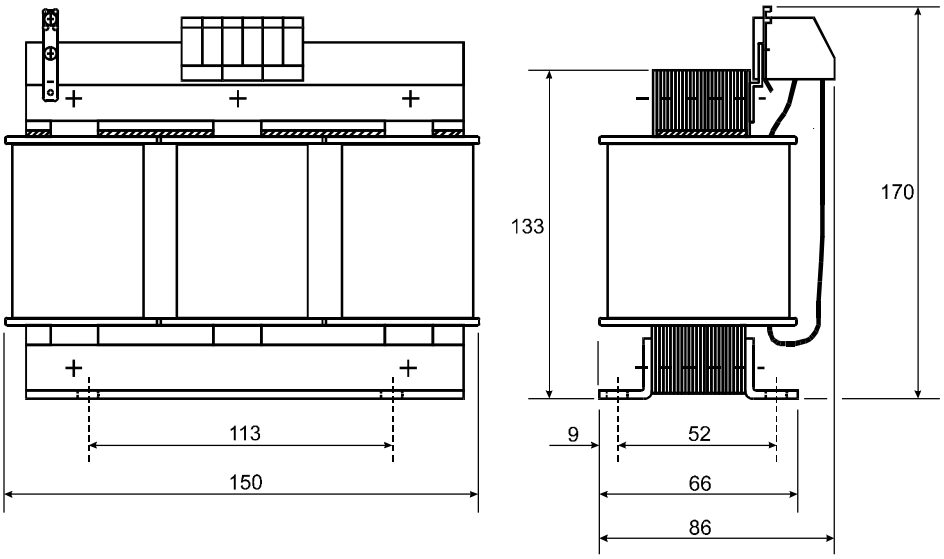


Data

| | |
|---|---|
| Suitable screws for mounting: | M5 |
| Weight: | 3,8 kg |
| Rated Current: | 25 A |
| Rated inductivity: | 1,17 mH (+/- 10%) |

---

**Line reactor for SCE9x7**

BAUTZ order number 57.432:

Dimensional drawing

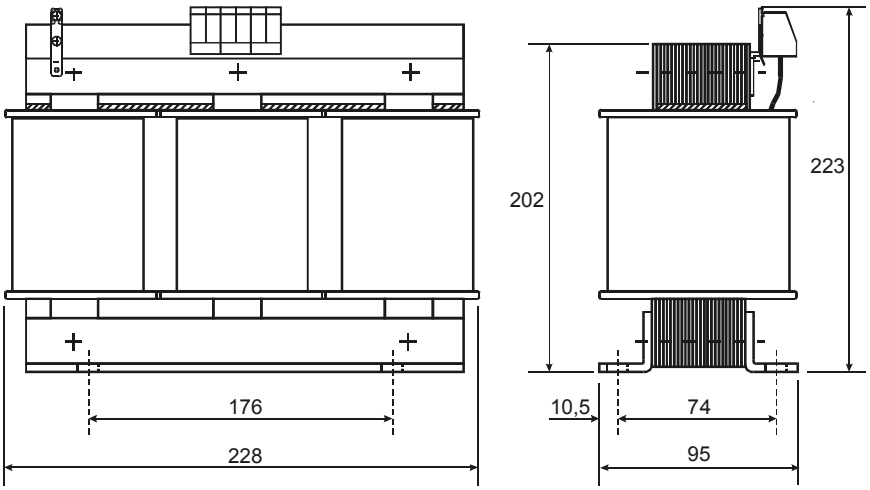


Data

| | |
|---|---|
| Suitable screws for mounting: | M6 |
| Weight: | 13,5 kg |
| Rated Current: | 50 A |
| Rated inductivity: | 0,59 mH (+/- 10 %) |

**Selecting mains filter and line reactor**

As an application aid we compiled the following in formations

| **Accessories for "Restricted Distribution" and "Second Environment"** | | | | | |
|---|---|---|---|---|---|
| | **SCE9x3(A3)** | **SCE9x4** | **SCE9x5** | **SCE9x6(-2)** | **SCE9x7** |
| **Motor cable length** | | | | | |
| **Up to 10 m** | No line reactor in the input power supply, no mains filter | | | Line reactor recommended: NKD25/1,17 | Line reactor recommended: NKD50/0,59 |
| **Up to 50 m** | No line reactor in the input power supply, no mains filter | | | Line reactor recommended: NKD25/1,17 | Line reactor recommended: NKD50/0,59 |

| **Accessories for "Restricted Distribution" and "First Environment"** | | | | | |
|---|---|---|---|---|---|
| | **SCE9x3(A3)** | **SCE9x4** | **SCE9x5** | **SCE9x6(-2)** | **SCE9x7** |
| **Motor cable length** | | | | | |
| **Up to 10 m** | No line reactor in the input power supply, no mains filter | | | Line reactor required: NKD25/1,17 | Line reactor required: NKD50/0,59 |
| **Up to 50 m** | No line reactor<br><br>Mains filter required: Block HFD210-500/8 or Schaffner FN258-7/07 | No line reactor<br><br>Mains filter required: Block HFD210-500/8 or Schaffner FN258-7/07 | No line reactor<br><br>Mains filter required: Block HFD210-500/16 or Schaffner FN258-16/07 | Line reactor required: NKD25/1,17<br><br>Mains filter required: Block HFD210-500/25 or Schaffner FN258-30/07 | Line reactor required: NKD50/0,59<br><br>Mains filter required: Block HFD210-500/50 or Schaffner FN258-55/07 |


Eduard BAUTZ GmbH + Co.KG, D-64331 Weiterstadt, Tel. +49-6151-8796-10, Fax +49-6151-8796-123

## 8.7 Power Up/Down Sequencing

**Never switch off and then on again right away.**

**With the SCE9x3, SCE9x3A3, SCE9x4 or SCE9x5 applies:**

**Make sure (with the aid of a PLC or a timing relay) that between power-down and power-up on J1 at least 3 minutes elapse.**

The NTC thermistors in the soft startup circuit need this time to cool down.

For technical reasons it is necessary that the NTCs being used should cool down. If you find that:

- 3 minutes waiting time is not practicable in your application,
- you use the SCE in a high ambient temperature (>40 °C),

please read the Application Note called "Inrush current limitation" in Appendix 2 of this manual.

**With the SCE9x6 and SCE9x7 applies:**

**Make sure (with the aid of a PLC or a timing relay) that between power-up and the next power-up on J1 at least 30 s elapse.**

If the resistors used for limiting the inrush current get too hot, they may burn through.

Non-compliance may cause mains fuses to blow, a contactor connected in series will be overloaded and its contacts may stick.

**Safety-related in the event of an emergency stop.**

---

**Power-up sequence**

The drive can be safely powered up in any sequence. The drive and motor behave in a well-defined manner during intermittent or transient voltage line conditions, which means that the drive cannot suffer damage. The system also behaves properly when either just the main power supply or the control power supply only is powered and/or intermittent.

When the power up reset time is over (after the control power supply has been applied to J6), the drive will immediately begin the appropriate operation.

For example, if the control and main power supplies are applied together and the drive is enabled (i.e. the $\overline{\text{Enable}}$ input is pulled LOW and the limit switch inputs are pulled "HIGH“), the drive will enable and will then control the motor, once the power up reset time of less than 0.75 s is over.

If a fault is detected on power up, the drive will go straight to the fault status without enabling.

---

**Input $\overline{\text{Enable}}$ active during power-up on J1 only is not recommended**

It is not recommended that the main power supply should be applied when the status is as follows:
Control power supply is present **and** $\overline{\text{Enable}}$ input LOW (i.e. drive enabled).
If a low inductance motor is powered up in this sequence, the drive may report an overcurrent fault.

**Please either**
**apply the main and control power supplies at the same time,**
**or**
**if the control power supply is already on, apply the main power supply with the drive disabled.**

## 8.8 Control Power Supply

**Terminals J6: CTRL. VAC**

***Control power supply***
Power supply for the drive's internal control voltage:
230 $V_{AC}$ (+10 %, –55%)[1], current consumption approx. 250 mA.

**Cable and fuse**

Shielded cable is not required.

**Do not bridge the PE connections by installing a jumper wire in front of the device from J1 to J6 PE terminals, but connect them separately to the PE rail in the installation cabinet.**

The type of fuse to use could be, for instance, an automatic cut-out, 6 A or 10 A, characteristic B. The control power supply consumption is insignificant.

**Special considerations**

The control power supply is insulated from the motor power supply. Internal control voltages are fed by the control power supply. Therefore 115 - 230 $V_{AC}$[1] must be connected to J6. If the incremental encoder outputs are required to remain active if there is an emergency stop, this voltage must not be switched off in the event of emergency stop (see 8.1.5 Emergency Stop, page 30).

If the control power supply fails, the drive is disabled even if the main power supply is present. The motor stays deactivated.

[1] With the **SCE9x6 / SCE9x6-2 / SCE9x7** the wide range capability of the control power supply input can not be utilized, because this AC voltage feeds built-in fans, witch need defined voltages. Two variants of **SCE9x6** (obsolete soon) can be ordered ex works

a) SCE9x6 x**2**-xxx-xx for control voltage supply = 230 V +/- 10% f = 50...60 Hz
b) SCE9x6 x**1**-xxx-xx for control voltage supply = 115 V +/- 10% f = 50...60 Hz

**SCE9x6-2 and SCE9x7** drives accept either 115 V (±10%) or 230 V (±10%) as control power supply. These drive types have a relay in order to switch the fans in series or parallel, dependent from control power supply level.


Eduard BAUTZ GmbH + Co.KG, D-64331 Weiterstadt, Tel. +49-6151-8796-10, Fax +49-6151-8796-123

## 8.9 Motor Connections

### 8.9.1 Motor Series M, F, W, R

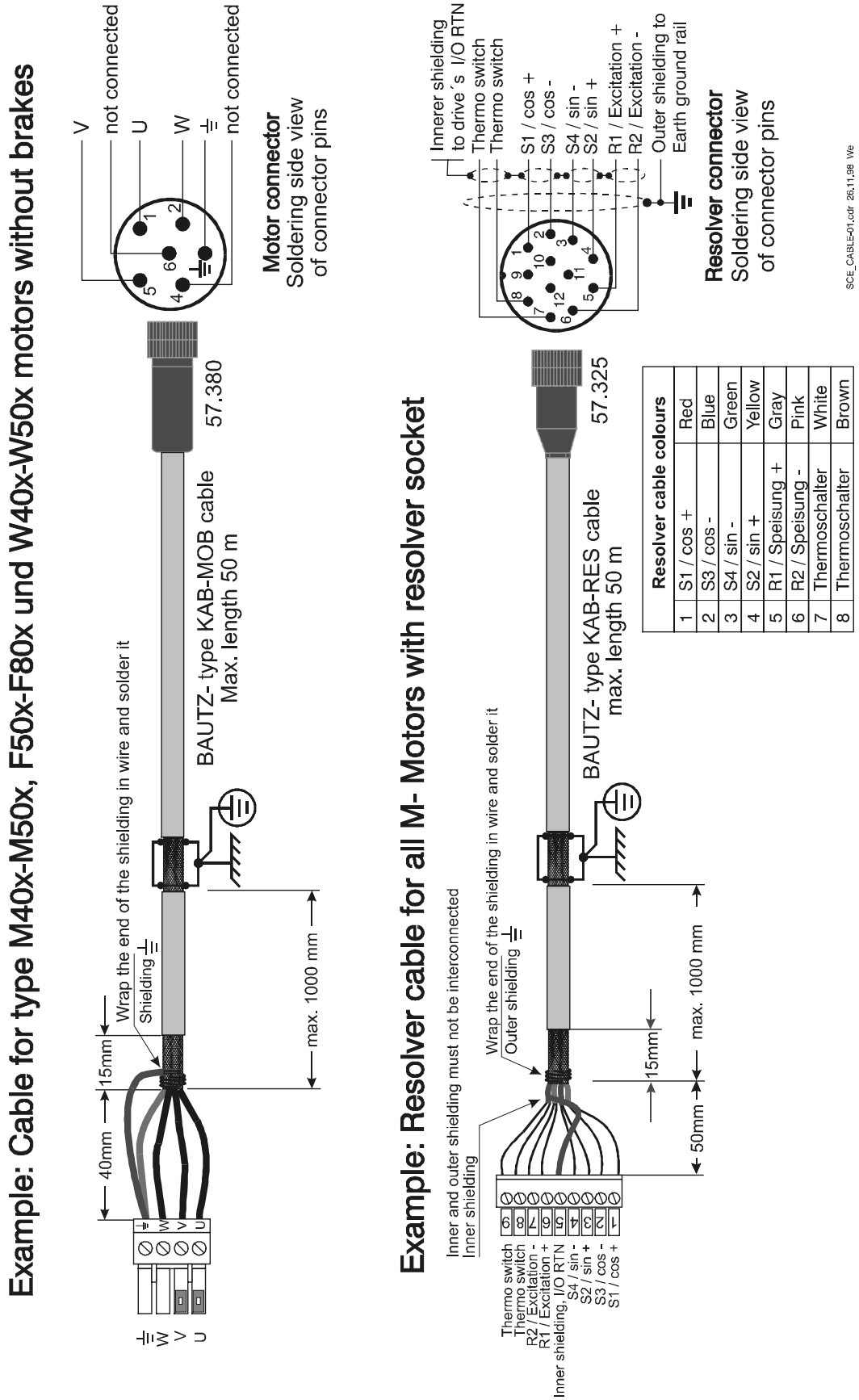


| Resolver cable colours | | |
|---|---|---|
| 1 | S1 / cos + | Red |
| 2 | S3 / cos - | Blue |
| 3 | S4 / sin - | Green |
| 4 | S2 / sin + | Yellow |
| 5 | R1 / Speisung + | Gray |
| 6 | R2 / Speisung - | Pink |
| 7 | Thermoschalter | White |
| 8 | Thermoschalter | Brown |

The previous diagram helps configuring the cables from the drive to the motor for the commonest types of motor without brakes. In the case of motors with brakes, see also the wiring suggestion **Controlling a holding brake** on page 56. You will find the pinout for other motor mating connectors in the Connection Diagram on page 34. It shows:

- The pin assignment for the (plugin) terminal block J2 / MOTOR on the drive.
- The pinout for R series motors and for every motor from M25x to M50x, as well as for F504 to F804. Suitable mating connectors are listed in section 4.2 Mating Connectors to Sockets on the Motor, page 13.
- The pin assignment for the larger motor connectors for M71x and F1004 motors. Their connector housings are non-metallic. This means the cable shielding cannot be grounded to them. For EMC reasons, special versions of these motors with terminal boxes are preferable.

All M9x motors have a terminal box.

### 8.9.2 Motor Cable Requirements

**Cross section**

| Drive | Cross section |
|---|---|
| SCE9x3A3 | 1,5 $mm^2$ |
| SCE9x3 | 1,5 $mm^2$ |
| SCE9x4 | 1,5 $mm^2$ |
| SCE9x5 | 2,5 $mm^2$ |
| SCE9x6 / 9x6-2 | 4,0 $mm^2$ |
| SCE9x7 | 10,0 $mm^2$ |

**Cables for motors without brakes**

**Shielded cable must <u>always</u> be used for the motor lead.**
We recommend, where appropriate, the motor cables mentioned in section 4.1 Cables, on page12. We cannot guarantee that other cables are suitable from the EMC point of view. The cable is not suitable for energy chain applications. Special flexible cables for energy chain applications are available from cable manufacturers. For instance, suitable cables are manufactured by the IGUS company of Cologne.

**Cable for motors with brakes**

**If the supply voltage for the holding brake is included in the motor lead, the wiring for the holding brake <u>must</u> have extra shielding to prevent interference with the 24 V supply.**

A special cable with individual and common shielding is suitable for this purpose:
**BAUTZ order code 57.211** ($4 \times 1.5\ mm^2 + 2 \times (2 \times 0.25\ mm^2)$).
Specify length required.
See also the wiring suggestion **Controlling a holding brake** on page 56.
Use separately shielded cable for the holding brake in the case of motors with terminal boxes. All motors can also be ordered with terminal boxes.

**Cable runs**

**Do not run motor cable parallel to cables from inductive or capacitive sensors and encoder lines. For immunity from interference we recommend that motor cables are run separately or are kept at least 50 mm away from lines that are sensitive to interference.**


Eduard BAUTZ GmbH + Co.KG, D-64331 Weiterstadt, Tel. +49-6151-8796-10, Fax +49-6151-8796-123

**Cable lengths**

For cable lengths of up to 10 meters, compliance with the regulations on emission of line-related interference has been tested in our CE test configuration without a sinusoidal filter in the motor line. For cables longer than this a mains filter is necessary. For cables over 50 meters in length an additional output filter in the motor line is obligatory. You are welcome to ask us about selecting this filter.

**Reducing output power :**

Where cables are long it is necessary, even when a filter is present, to reduce drive output power:
Reduce continuous output power linearly by 0.5 % for each meter of motor cable in excess of 10 meters by altering the variable `ItThresh`.

**For example:**
**Cable length 50 meters:**
**(50m—10m)×0.5 %/m=20% or 1/5.**
**Therefore subtract 1/5 from the typical `ItThresh` value for the drive.**
**The typical `ItThresh` value for the drive is 55%.**
**Deduct 1/5 from this. Then: `ItThresh` (new) is 44%.**

**Reference values**

| Cable length | Variable `ItThresh` |
|---|---|
| 15 m to 25 m | 51 % |
| 25 m to 35 m | 48 % |
| 35 m to 45 m | 45 % |
| 45 m to 50 m | 44 % |

## 8.9.3 Grounding the motor cable shielding at the drive end

**Provide grounding clamps:**

Provide a grounded bar fitted with metal grounding clamps close to the drive. This will be used for large-surface grounding of the cable shielding. For this purpose remove a short length of the outer insulation from the shielded cables leading to the SCE (approx. 10 mm), spread out the shield and place it under one of the metal clamps. The remaining cable length from the clamp to the SCE should be less than 1 meter.
Be sure to extend the shielding as far as the front of the terminals on the drive. Even short unshielded sections of the motor lead will act as radiating antennas for HF interference. The cable clamps act as large-surface contacts for the shielding. They are provided only by reason of high-frequency emissions. For personal safety provide an additional protective earth connection to the protective conductor terminal at the drive.

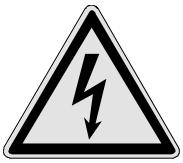

**WARNING:**
**The shielding on the motor cable(s) contains capacitively coupled voltages which are highly dangerous if touched!**
**For this reason:**
- **The motor cable shielding and where appropriate the inner shield for the wiring to the holding brake must be hooked up at the drive end with a stranded wire and connected to protective conductor terminal J2!**

This is necessary because if anyone detaches the cable clamp from the bar, there is the danger of receiving an electric shock from the shield braiding or from the housing of any motor connector that may be linked to it, unless the shielding is also grounded elsewhere.

It is a strict requirement that complete and uninterrupted motor cable shielding shall be provided between the drive and the motor. Connectors and couplings in the motor line must be chosen in accordance with this rule.

If the motor line includes a resistance braking contactor (see section "**Resistance braking**“, on page 31 ), the following points apply:

- The protective conductor to the motor must be continuous.
- The complete and entire shielding shall be uninterrupted, i.e. the contactor must be encased in a (pierced) metal housing. The shields on the incoming and outgoing lines must have a large-surface connection to this housing.
- The drive must only be activated if the resistors in the resistance braking circuit are not switched into the motor line.

### 8.9.4 Grounding the Motor Cable Shielding at the Motor End

**Basic rule:**

The motor cable shielding must be grounded both ends.

**Mating connectors for motors M25x – M50x W40x – W50x F50x – F80x**

EMC motor connector, single: BAUTZ order code: 57.380, which is also included in EMC mating connector kit 57.397

Use mating connector 57.380 for the motors. Open out the motor cable shielding and ground it to the connector housing. The connector housing is connected internally to the protective conductor pin. The connector is supplied with installation instructions including an illustration to help with attaching it.

**Other motors**

Use the following mating connectors for other motors:

| | |
|---|---|
| M71x and F100x: | Mating connector 57.355 |
| Motors in the R series: | Amphenol MS connector |

In this case please ground the motor cable shielding near the motor by a clamp providing a large surface ground connection.

If you feel it is indispensable to ground the motor cable shielding directly at the motor, special versions of the motors with terminal boxes are available.


Eduard BAUTZ GmbH + Co.KG, D-64331 Weiterstadt, Tel. +49-6151-8796-10, Fax +49-6151-8796-123

## 8.10 Resolver Connections

**J3:**
**RESOLVER**
***Motor feedback***

**Resolver S1, S2, S3, S4** *(INPUTS)*
Connect the resolver sine/cosine outputs here. Differential inputs with > 75 V/µs common-mode pulse range and > 25 kΩ input impedance.

**Resolver excitation - R1, Excitation 0 V - R2** *(OUTPUTS)*
Outputs for the resolver excitation. Outputs are 9.2 $V_{rms}$ at 6510.42 Hz. Maximum loading 75 $mA_{rms}$. These outputs are completely proof against short circuits and ground faults at room temperature (25°C). In ambient temperatures exceeding 50°C, however, short circuits which last longer than 5 minutes may cause damage.

**Motor PTC, PTC 0 V** *(INPUTS)*
Both these inputs act as connections for a PTC thermistor or normally closed thermo switch imbedded in the motor winding. If the resistance between these terminals becomes greater than 6.2 kΩ, the drive cuts out and you receive the Motor Over Temperature fault message. The PTC evaluation is matched to the PTCs which are built into R and S series motors as standard. Please note that "PTC 0 V“ is connected to the terminal "I/O Return “.

---

**Suitable cable**

Use double-shielded cable with wires in twisted and shielded pairs. The necessary 4 pairs of wires must then also be shielded as a whole. We recommend BAUTZ order code “KAB-RES”, which can be obtained from Bautz by the meter. This cable is unsuitable for energy chain applications. Cable which is both double-shielded and suitable for energy chain applications is manufactured by the IGUS company of Cologne, for example.

---

**Connecting resolver cable shielding at the <u>drive end</u>:**

Remove about 10 mm of the outer insulation only near the cable clamp at the drive end. Clamp the outer shielding to the grounding bar. This gives ground potential to the outer shielding. Shielding is finished off and insulated as close as possible to the terminals on J3. The inner shields have to be insulated from the outer shield. Bring the inner shields together just in front of the J3 connector and connect them to J3, terminal 5.
**It is essential to do the wiring and to select the pairs of wires exactly as shown in the Connection Diagram on page 34.**

---

**Connecting resolver cable shielding at the <u>motor end</u>:**

The resolver mating connector in connector kit 57.346 is identical to the single mating connector 57.325.
Insulate the inner shields from one another in the connector housing with shrink hose and insert them in the connector. Do not attach them. Connect the outer shielding to the connector housing. Details on connecting the outer shield to the connector housing are shown in the installation diagram which the manufacturer supplies with the connector.
The motor thermo switch lines are included in this cable and must be connected. On BAUTZ servomotors the thermo switch is closed when the motor is cold. On a motor from another source without a thermo switch the input concerned can *in appropriate cases* be bridged at the drive end.

CAUTION – if this is done the motor is then left without adequate thermo protection.

## 8.11 Regeneration Resistor

Motor braking energy is partially converted into heat in regeneration resistors. The resistors fitted to every SCE (except SCE9x7) are designed for continuous low-level performance but can take a high load for a short time, and are adequate for the purpose of normal applications. (See 2.2 – Power Specifications / **Regeneraton circuit power** – on page 8.) In some few applications in which the drive will be actively braking at frequent intervals or for lengthy periods, the internal regeneration resistor of the SCE might not be sufficient. Here an external regeneration resistor must be used. The need for this depends on the load cycle and the application. Our technical department will be pleased to advise you. When using several SCEs, these regeneration resistors must not be combined. Each SCE requires its own regeneration resistor, **if needed**. For help on resistor selection see next page.

**J5:**
***Regeneration resistor and bus voltage***

Terminal block on top of SCE9x3(A3),9x4,9x5, resp. on front side of SCE9x6, resp. on bottom side of SCE9x7:

| | |
|---|---|
| Terminal +B | + DC bus or regeneration resistor (output) |
| Terminal R | Regeneration resistor (output) |
| Terminal Ri | Internal regeneration resistor (not with SCE9x7) |
| Terminal –B | – DC bus (output) |
| Terminal Protective Conductor | External regeneration resistor housing |

An isolated wire link is fitted by factory between terminals R and Ri, thus connecting the drive's internal regeneration resistor to the regeneration circuit output. The other end of the internal regeneration resistor is hard wired to +B bus internally. If necessary, an external regeneration resistor can be connected between terminals +B and R. In this case, the link between terminals Ri and R must be removed. See section 8.3 – Connection Diagram – on page 34.

With the SCE9x7, no internal regeneration resistor and no Terminal Ri is provided; here in all cases an external regeneration must be connected between Terminals +B and R.

**Suitable cable**

Due to powerful, pulsed peak currents, use shielded cable. Cable cross section like with motor cable. With the SCE9x7, for the regen resistor 6 mm² cross section is sufficient. The insulation on this cable will be subjected to a maximum of 850 $V_{DC}$.

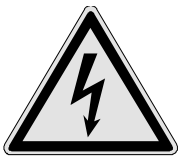

**WARNING:**

**Provide a shielded cable on which the**
**insulation is specified for a minimum of 600 $V_{AC}$!**

With the SCE9x3 / -9x3A3 / -9x4 / -9x5 applies: Do not use end sleeves on the spring loaded terminals of J5. Carry out large-surface shielding at both ends.


Eduard BAUTZ GmbH + Co.KG, D-64331 Weiterstadt, Tel. +49-6151-8796-10, Fax +49-6151-8796-123

**Connection**

The J5 terminals connect the internal regeneration resistor, or provide connection points for an external regeneration resistor. These both pick up the energy regenerated when the motor is braking. An external **regeneration resistor** is connected **between terminal +B and terminal R** (regeneration resistor). When using an external regeneration resistor, make sure that the internal resistor is disconnected.
The DC bus voltage can be measured directly on + B and – B.

**Selecting external high power regeneration resistors**

All regeneration resistors mentioned here have a perforated sheet metal housing which gives them protection class IP20 when mounted on a sheet metal panel. The resistor's rated power given below defines continuous power at a resistor temperature of 300 °C. These resistor types accept high overload if the duty cycle is appropriate.

If the drive's internal regeneration resistor is not sufficient, we suggest using an external regeneration resistor, one for each drive
**SCE9x3A3, SCE9x3 or SCE9x4**
1 piece **BAUTZ order code: 82 RK** (82 Ohm, 300 Watt continuous power)

Dependent from the power to be absorbed, for a
**SCE9x4 or SCE9x5** drive you may provide
1 piece **BAUTZ order code: 36RK-275W** (36 Ohm, 275 Watt)
1 piece **BAUTZ order code: 36RK-500W** (36 Ohm, 500 Watt)
2 piece **BAUTZ order code: 82 RK** wired in parallel per SCE ($P_{cont}$= 2x300 W)

Dependent from the power to be absorbed, for a
**SCE9x6** you may provide
1 piece **BAUTZ order code: 27RK – 500 W** or
**27RK – 1000 W**

Dependent from the power to be absorbed, for a
**SCE9x6-2** you may provide
1 piece **BAUTZ order code: 22RK – 500 W** or
**22RK – 1000 W**

**SCE9x7** drives do not have any internal regeneration resistor.
Dependent from the power to be absorbed, please provide
1 piece **BAUTZ order code: 12RK – 500 W** or
**12RK – 1500 W**

We offer regeneration resistors with higher rated power on request
For dimensions and details see section 8.11 - Regeneration Resistor – page 52.

**WARNING:**

**The regeneration resistor and its housing can become very hot.**
**There is a risk of burning if touched.**
**Be sure to leave adequate clearance!**

**Shielding**

The external resistor can be installed on a metal mounting panel (possibly in a cabinet). Remove the paint on the panel where it contacts the bearing surfaces of the sheet metal housing in order to insure large-surface contact.

**Dimensions**

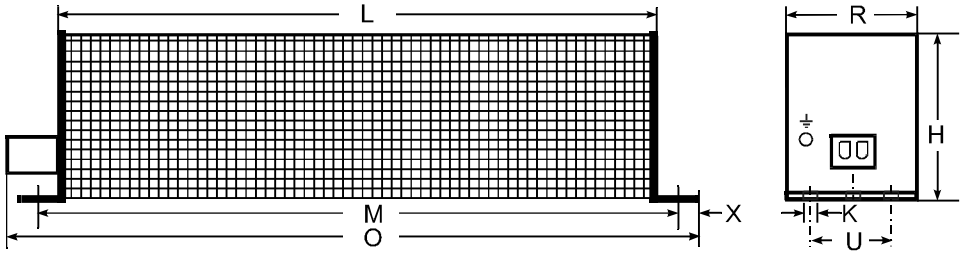


| Order code | Dimensions in mm | | | | | | | |
|---|---|---|---|---|---|---|---|---|
| | H | K | L | M | O | R | U | X |
| 82RK | 87 | 5,8 | 300 | 326 | 350 | 75 | 48 | 10 |
| 36RK - 275 W | 87 | 5,8 | 300 | 322 | 350 | 75 | 48 | 10 |
| 36RK - 500 W | 120 | 5,8 | 400 | 426 | 450 | 92 | 64 | 10 |
| 27RK - 500W | 120 | 5,8 | 400 | 426 | 450 | 92 | 64 | 10 |
| 27RK - 1000W | 120 | 5,8 | 600 | 626 | 650 | 92 | 64 | 10 |
| 22RK - 500 W | 120 | 5,8 | 400 | 426 | 450 | 92 | 64 | 10 |
| 22RK - 1000 W | 120 | 5,8 | 600 | 626 | 650 | 92 | 64 | 10 |
| 12RK - 500 W | 120 | 6,5 | 260 | 300 | 360 | 92 | 64 | 10 |
| 12RK - 1500 W | 120 | 6,5 | 500 | 540 | 600 | 92 | 64 | 10 |


Eduard BAUTZ GmbH + Co.KG, D-64331 Weiterstadt, Tel. +49-6151-8796-10, Fax +49-6151-8796-123

# 8.12 Control Signals

## 8.12.1 Controlling the Motor Holding Brake

**Suitable cable for motors with brakes**

**If the supply voltage for the holding brake is included in the motor lead, the wiring for the holding brake <u>must</u> have extra shielding** to prevent interference with the 24 V supply.
A special cable with individual and common shielding is suitable for this purpose: BAUTZ order code 57.211 ($4 \times 1.5\ mm^2 + 2 \times (2 \times 0.25\ mm^2)$).
Not suitable for energy chain applications. Specify length required.

**In the case of motors with terminal boxes, use extra shielded cable for the holding brake only.** All motors can be ordered with terminal boxes.

---

**Terminals**
**J4-11 brake,**
**J4-13 +24 V ext.**
**J4-5 I/O Return**

Servomotors with brakes are available as an option. They have a builtin holding brake which is held open by 24 $V_{DC}$.
The `Brake` function can be assigned by the software to one of the BDIOs during setup. With SCE devices, the automatic setup assigns BDIO 5 and "active LOW“ as standard.
If the brake is required to cut in, it returns LOW potential to J4, pin 11 (transistor open), and if the brake is to be released, the "+24 V external" fed in by pin 13 is switched through to pin 11.

J4-5 "I/O Return “ must be connected to the “GND of the 24 V external”.
“GND of the 24 V external” must be grounded near the source..

---

**Auxiliary relay**

**CAUTION !**
**The motor holding brake must not be connected directly to the "Brake" output on the SCE.**

Due to the maximum permissible loading of the output transistor (max. 30 V, 100 mA), an auxiliary relay (normally open) must be used.
Fit a protection diode via the relay coil, since the transistor has to handle an inductive load.
In order to release the brake, the auxiliary relay has to connect the external 24 V to the motor holding brake. Spark suppressors (e.g. a varistor S05K25 or RC components) extend the useful life of the switch contact on the auxiliary relay, since an inductive load will be connected to the holding brake.

---

**Action**

If the control power supply to J6 fails, the output transistor opens, the output goes LOW and the brake can cut in.(See **BDIO 5** , page 59)

The standard factory setting is:

**If the control power supply to J1 fails, the brake does not cut in!**

The default `VBusThresh` parameter is -1 V, so no fault message is triggered and the brake output does not switch to LOW.

This is for the following reasons:
1. There are no fault messages with any power up sequence.
2. The level of the input power supply remains variable.

If you wish to change this:

- It is best to set the "VBusThresh“ parameter to a meaningful bus voltage which will trigger a fault message if voltage drops below the threshold. If fault messages occur, the "Brake“ output becomes LOW.

- You can also use hardwiring to insure that if the input power supply to J1 fails, the drive is deactivated and the holding brake and/or resistance braking circuit will cut in (compare page 31).

**Suggested wiring: Controlling a holding brake**

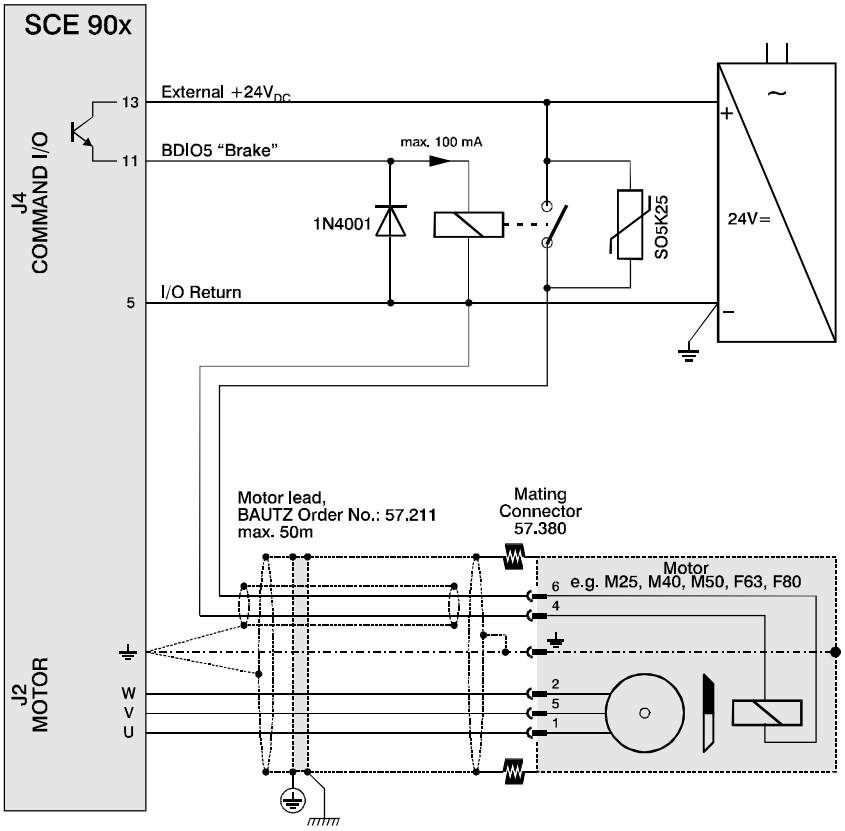



Eduard BAUTZ GmbH + Co.KG, D-64331 Weiterstadt, Tel. +49-6151-8796-10, Fax +49-6151-8796-123

## 8.12.2 BDIOs - Bidirectional Inputs and Outputs

**$\overline{\text{Bar}}$**

A $\overline{\text{Bar}}$ over the designation of an I/O function in the text below means that the function concerned is active when LOW.
In this case LOW means the "I/O Return " potential.

Examples:

1. The $\overline{\text{Enable}}$ input has an internal pull-up resistor to HIGH. This means that the input must be pulled LOW in order to enable the drive. If this input is not connected or is connected HIGH, the drive cuts out.

2. In the event of an automatic setup using "930 Dialog", the function $\overline{\text{Clockwise Inhibit}}$ is assigned to BDIO2 as "Input – Active LOW".
   Like all BDIOs, the input $\overline{\text{Clockwise Inhibit}}$ has an internal pull-down resistor to LOW. This means that the input must be pulled HIGH in order to enable clockwise rotation. If this input is not connected or is connected LOW, clockwise rotation is inhibited.

---

**J4 COMMAND I/O** **BDIO 1, 2, 3, 4, 5, 6** *BIDIRECTIONAL I/Os*

**Characteristics**
BDIO 1,2,3,4,5,6

You can assign these 6 I/O connections to particular functions independently of one another. For this you can use variables `BDIOMap1` to `BDIOMap6`. In the event of an automatic setup these BDIOs take the defaults described below. Generally the defaults do not need to be changed in any way.

All output transistors are $U_{CE}$ = 30 V types. A maximum of 100 mA may be drawn from outputs BDIO 1 - 5. BDIO 6 is designed for a higher maximum current of 200 mA.

**CAUTION:**
**These outputs are not short-circuit proof.**

As inputs, the BDIOs have a switching threshold that is recognized with a hysteresis of 1 $V_{p-p}$. The hysteresis point and its associated pull-up voltage can have either of two values, and you can choose between them with the aid of software parameters.
If the `BDLgcThr` parameter is set to 0, the switching threshold is between 2.1 V and 3.1 V.
If the `BDLgcThr` parameter is set to 1, the switching threshold is between 4.0 V and 5.0 V.

To suppress pulse interference, the hardware filters the input signal using a lowpass filter with a 20 µs decay time. A 10-kΩ/0V **pull-down** resistor is connected to all BDIOs.
(The input $\overline{\text{Enable}}$ is different: In this case an internal 3.3-kΩ **pull-up** resistor is connected in series to a diode to the positive of the internal pull-up voltage.)
Each BDIO is set or read every 2 ms by software. You can configure each one for any available function; and change the configuration at any time using a digital interface on an option card. The user's default configuration is held in nonvolatile memory.

The current status of each of these inputs and the assigned status of the outputs can be read by option cards over their digital interfaces. The logical polarity of the BDIOs can also be programmed via the software, i.e. each input or output can be defined as LOW-active or HIGH-active. The active edge can be programmed for edge-controlled functions such as the register function. A list of the factory default settings for each BDIO appears below.

(Register functions are not used in the case of the most frequently utilized OCE930 option cards with serial interfaces, but only with option cards OCE940 and OCE950 - SERCOS or position control. Due to the high speed required, register inputs 1 and 2 are assigned to BDIOs 4 or 5, so the register function cannot be assigned to any BDIO like other functions.)

---

**J4-7 BDIO 1**
Default:
Input $\overline{\text{Fault Reset}}$

This input is used to reset the drive after a fault. This input is LOW-active by default, i.e. you must connect 24 V active otherwise Reset is permanently on. If the input is open, the drive will not operate unless the $\overline{\text{Fault Reset}}$ input is pulled HIGH. If it goes LOW, the power stage is disabled and this Reset status is maintained by the hardware for about another 0.1 s after the input is reset.

---

**J4-8 BDIO 2**
Default:
Input
$\overline{\text{Clockwise Inhibit}}$

This input prevents any further clockwise movement of the motor shaft (i.e. when looking directly onto the shaft). If the shaft is already rotating clockwise, the motor is braked to zero revolution with the maximum torque permitted by the user-defined output current limits (`ILmtMinus` and `ILmtPlus`). This input has no effect whatever on counterclockwise movement (i.e. in the opposite direction). The input is LOW-active by default, i.e. the internal pull-down resistor activates the lock if the input is not powered. It can be used as limit switch input for clockwise rotation. Please make sure that the LED status display alternates between "8" and "┐", when the limit switch has responded.

**WARNING:**

**Limit switches must stay activated all the remaining travel way behind the switch to be sure of preventing the shaft from accelerating in the inhibited direction again.**

---

**J4-9 BDIO 3**
Default:
Input
$\overline{\text{Counterclockwise Inhibit}}$

The same as input $\overline{\text{Clockwise Inhibit}}$, except that this input prevents further counterclockwise movement (i.e. in the opposite direction).
The status display alternates between "8" and "┌".

---

**J4-10 BDIO 4**
Default:
not configured

Normally not configured and freely available.


Eduard BAUTZ GmbH + Co.KG, D-64331 Weiterstadt, Tel. +49-6151-8796-10, Fax +49-6151-8796-123

**J4-11 BDIO 5**
Default:
Output Brake

This output is pulled LOW,
- when the control power supply is switched off, or
- when control power is present and the drive is disabled (`Enabled = 0`).

Otherwise this output passes the external 24 V from pin 13 (max. 100 mA!).
This output is intended to drive a normally open, that in turn powers a mechanical brake on the motor shaft. This is necessary for applications that require a shaft lock when the servodrive is off, is disabled, or has detected a fault.
If the brake should cut in when the main power supply fails, please read section 8.12.1 – Controlling the Motor Holding Brake – on page 55.

---

**J4-12 BDIO 6**
Default:
Output Fault

This output provides a general fault message. It is pulled LOW, if the drive reports a fault or there is a failure of the control power supply (or auxiliary power supply). If no fault is present, it passes the external 24 V from pin 13. The output transistor on BDIO 6 can handle max. 30 V, 200 mA. The other BDIO output transistors can handle only 100 mA.

---

**This list shows some of the other available BDIO functions:**

| | |
|---|---|
| Input Enable2 | A second Enable input (compare parameter `Enable2`) |
| Input Run/Stop | Enable / Brake to zero, then disable. (compare parameter `RunStop`) |
| Input VelCmdSrc | Select one of two rotation velocities. Useful to emulate a clutch / brake combination. (compare parameter `VelCmdScr`) |
| Input AInNull | Null the present `AnalogCmd` voltage to zero `AnalogIn`. (compare parameter `AInNull`) |

---

**Internal circuit diagram for BDIOs**

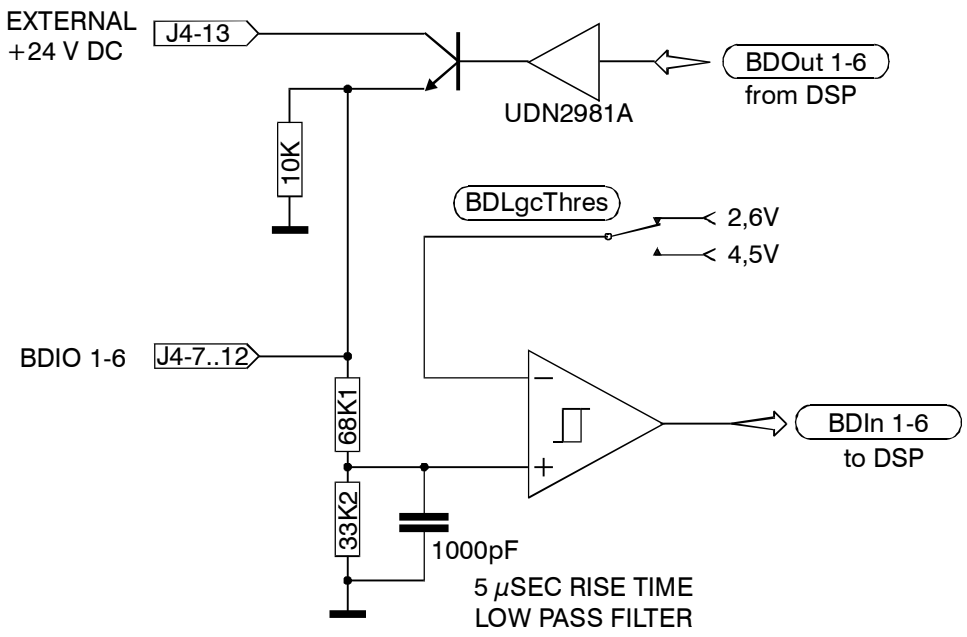

## 8.12.3 I/O Return

**J4-5 and J4-18** **I/O Return** *REFERENCE POTENTIAL*

This terminal is the common reference potential for the analog and digital I/Os. It is connected to the protective conductor over a 22-nF capacitor and a parallel connected 8 V varistor.

**CAUTION !**
**If the enable circuits are connected to an external voltage source (e.g. 24 V from the PLC), their GND must be grounded near the source and must be connected to the SEC's "I/O Return", e.g. on pin J4-5.**

The +5 V auxiliary voltage from the SCE is then galvanically connected with that from the PLC.

## 8.12.4 Input +24 V External

**+ 24 V external** *INPUT*

**J4-13** For connecting an external voltage of between 5 and 30 $V_{DC}$ (normally +24 V from the PLC), which the output transistors of the BDIOs either pass or not. Compare the internal wiring diagram of the BDIOs, above.


Eduard BAUTZ GmbH + Co.KG, D-64331 Weiterstadt, Tel. +49-6151-8796-10, Fax +49-6151-8796-123

## 8.12.5 Input Enable

**J4 COMMAND I/O** **$\overline{\text{Enable}}$** *INPUT*

**J4-6** **$\overline{\text{Enable}}$**

This input serves to enable the device and is active when LOW.
The power stage is disabled, i.e. the motor is without current, when this input is not powered.
Internally a 3.3-kΩ resistor is connected in series with a diode to the internal pull-up voltage. A switching transistor for this input must exhibit at least 5 mA collector current.

An external voltage must not be greater than 30 V by reference to the I/O Return.

The switching threshold is recognized with a hysteresis of 1 $V_{pp}$. The hysteresis point and associated pull-up voltage can take either of two pairs of values, and you can choose between them with the aid of software parameters.

If the `BDLgcThr` parameter is set to 0, the switching threshold is between 2.1 V and 3.1 V and the input is set to 5 V.
If the `BDLgcThr` parameter is set to 1, the switching threshold is between 4.0 V and 5.0 V and the input is set to 12 V.

To prevent incorrect switching due to pulse interference, the input signal is filtered using a lowpass filter with a 2 ms time constant.

**Internal circuit diagram $\overline{\text{Enable}}$**

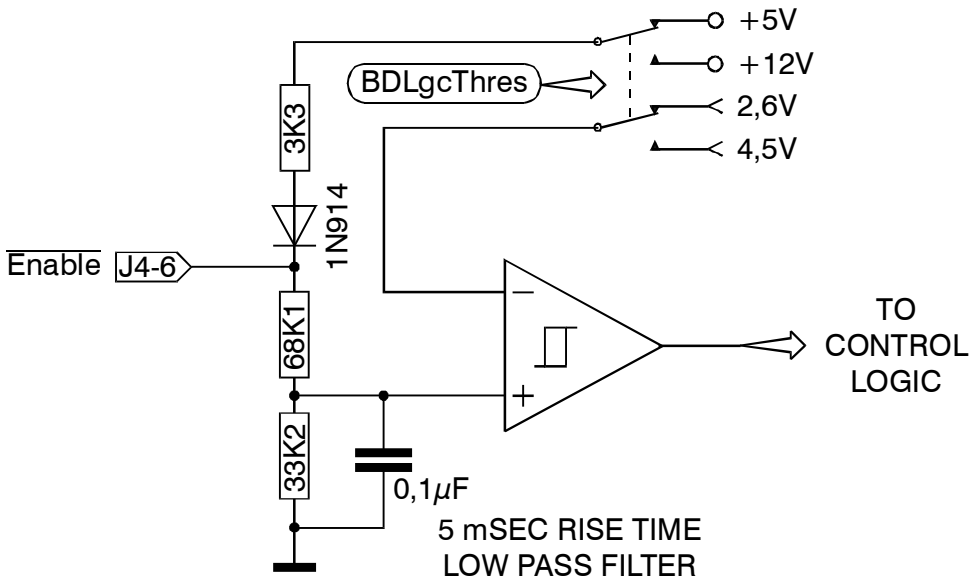


**Enable2**

If an HIGH-active Enable input is required, the function "Input Enable2" can be assigned to a BDIO. If you want this to be for instance the normally unconfigured BDIO4, use variable `BDIOMap4`. Using the “Setup BDIO” window you can assign to BDIO4 the input function `Enable2`, polarity “Active/High”. After that, the input $\overline{\text{Enable}}$ is hardwired and BDIO4 is used as input Enable2. Compare variable `Enable2` in the manual for the option card.
The above applies only when motors with resolver feedback are connected.

## 8.12.6 Analog Command Input

**J4 COMMAND I/O** **Analog command (+) (–)** *INPUT*

**J4-1** Command +
**J4-2** Command -

These inputs accept the analog command from the user. This is a differential input to an A/D converter. It has a maximum single ended voltage range with respect to I/O Return on either input of ± 21 V and an input impedance of greater than 50 kΩ. The full scale differential command input range is ± 13.5 V. The offset and bandwidth of a single pole lowpass filter can be adjusted via software parameters at setup (`ADOffset, ADF0`). When these inputs are used as a motion command, the input gain can also be adjusted via software parameter at setup (`CmdGain`).

**Wiring**

The command line from the positioning unit to the SCE must be shielded. It must be as short as possible (< 3 meters) and must not run directly parallel to the cables for the motor current and regeneration resistor. The shield must be grounded to the position controller at exceptionally one end only, so that no transient currents will flow in this shielding. Currents in the shielding could lead to noisy signals in the command line. This would result in rough running, accompanied by an unwanted increase in rms motor current and a rise in motor temperature.

**Internal circuit diagram**

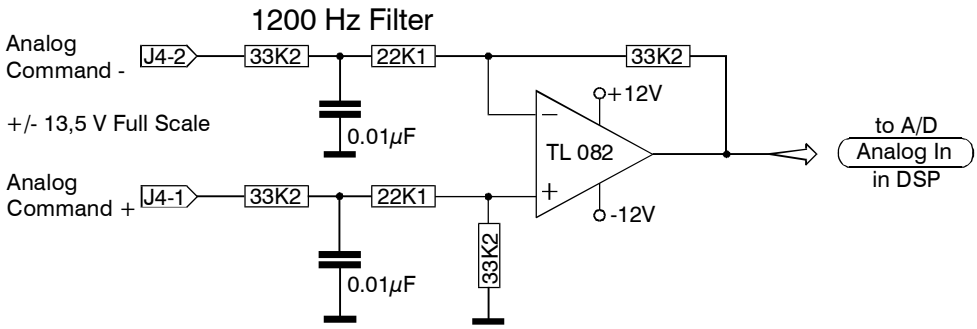



Eduard BAUTZ GmbH + Co.KG, D-64331 Weiterstadt, Tel. +49-6151-8796-10, Fax +49-6151-8796-123

## 8.12.7 Encoder Outputs

**Function**

For feeding back the motor position to an external position controller or to a slave axis. The drive emulates an optical encoder. The resolution, i.e. the number of pulses in the emulated encoder, is defined by the parameter `EncOut`. The output signals can only be generated if the control power supply is present on J6 – CTRL VAC.

**J4 COMMAND I/O**

**J4-14** Output A
**J4-15** Output $\overline{A}$
**J4-16** Output B
**J4-17** Output $\overline{B}$

The two output pairs A and $\overline{A}$, B and $\overline{B}$, are differential, incremental TTL position signals generated by the resolver feedback electronics. These outputs correspond to normal incremental encoder signals. The output drivers are RS422 compatible, type 26LS31 line drivers. The maximum recommended load current is ± 20 mA, corresponding to a minimum line-to-line load resistance of 100 Ω. The outputs are short-circuit proof (to I/O Return) without limitation.
If these outputs have to feed two or more separate devices, please ask BAUTZ application department.

**J4-19** Output Z
**J4-20** Output $\overline{Z}$

The two connection points Z and $\overline{Z}$ act as differential TTL marker pulses. (This signal is given a different name by different encoder manufacturers, e.g. $U_{A0}$, Marker, Index, Zero or Null pulse.) It appears once per revolution of the motor shaft, beginning at resolver position = 0, and its width amounts to nominal 1 quadrature pulse. See above for details of output drivers.

**J4-18** I/O Return

This terminal, like J4-5, is the reference for digital and analog I/Os. Connect the external position controller GND to SCE drive I/O Return.

**Suitable cable**

Use shielded cable. Suitable cable can be ordered from Bautz under order code 57.203. The CE testing of our sample configuration was carried out using this type of cable. Do not lay cables parallel to the motor cable. Shielding should be grounded receive end only. In the event of signal interference order double shielded KAB-RES (see page 12). Using this, ground the outer shield to the protective conductor at both ends, and connect the inner shield to GND at the receive end only, insulated from the protective conductor.

**Internal circuit diagram**

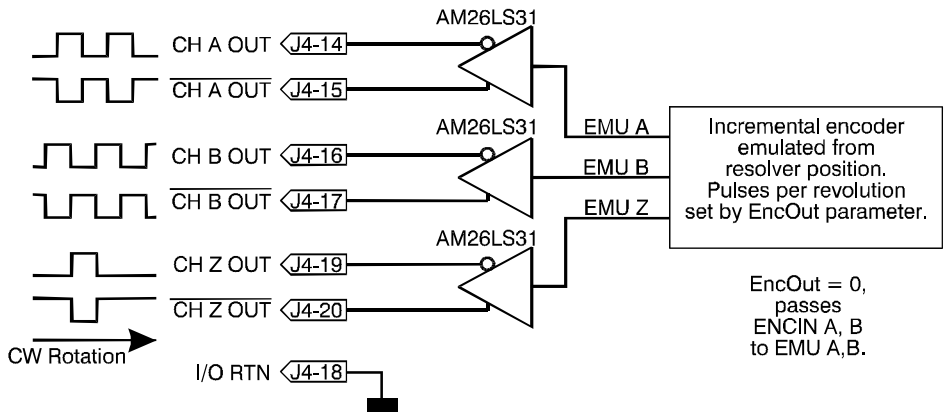


For master-slave applications, also connect J4-18 on the master and slave.

## 8.12.8 Inputs: Encoder / Step and Direction / Step Up and Step Down

**J4 COMMAND I/O**

**J4-21 to J4-24**

| | J4-21 | J4-22 | J4-23 | J4-24 |
|---|---|---|---|---|
| **either** | Channel A | Channel $\overline{A}$ | Channel B | Channel $\overline{B}$ |
| **or** | Step + | Step – | Direction + | Direction – |
| **or even** | Step Up + | Step Up – | Step Down + | Step Down – |

These inputs specify position command in one of three ways: with incremental encoder signals, or with step and direction signals, or with step up/down counting pulses. The required type of position command is defined by parameter `EncMode`. The scale factor of these incremental position command is fully adjustable by software parameters. `EncInF0` gives a choice between full recognition speed and slower, interference-resistant recognition.

These two input pairs are differential, RS422 compatible, type 26LS32 line receivers. The recommended common-mode range for the differential inputs is < ± 7 V by reference to the I/O Return, and the guaranteed differential voltage switching thresholds are > ± 0.2 V.

Suitable drivers must be capable of handling > 3 mA to/from these inputs. Each of these two input pairs has an internal bias network for easy connection to single ended sources. If an input stays unused, it sets itself up at 2.2 V – 2.5 V so that an input pair with only one powered input is sure to recognize LOW for a voltage of < 2.0 V, and HIGH for an input voltage of > 2.7 V. This is compatible with a TTL driver fitted with a pull-up resistor.

**Internal circuit diagram**

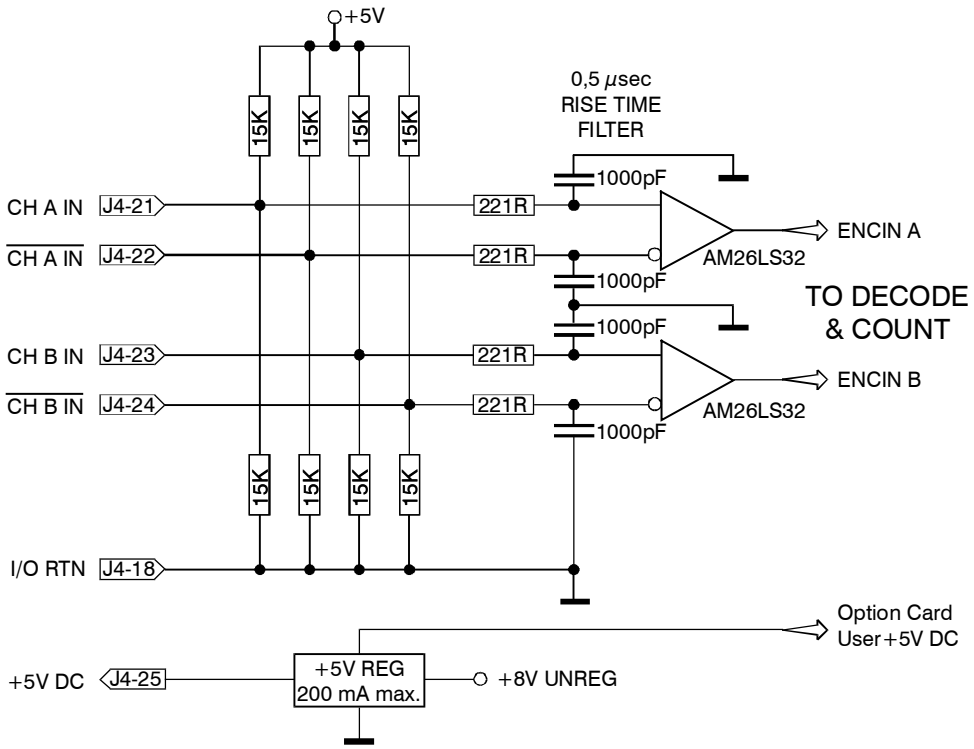



Eduard BAUTZ GmbH + Co.KG, D-64331 Weiterstadt, Tel. +49-6151-8796-10, Fax +49-6151-8796-123

### 8.12.9 +5 Volt Auxiliary Power

**J4 COMMAND I/O** **+ 5 $V_{DC}$** *OUTPUT*

**J4-25** + 5 $V_{DC}$

The reference is "I/O Return“, on J4-18 for example. It provides you with an encoder power supply. Voltage is 5 $V_{DC}$ ± 5 % and is short-circuit protected to I/O Return. This voltage is passed to any plugin option cards that are fitted and may also appear on the I/O terminal of an option card, such as on the OCE930 option card at the +5 $V_{DC}$ output pin on jack J31 (serial interface). The maximum permitted total current for all connected loads is 200 mA.

## 8.13 Monitor Signals

**J4 COMMAND I/O** **Analog monitor outputs 1, 2** *OUTPUTS*

**J4-3** DAC Monitor 1
**J4-4** DAC Monitor 2

The reference is "I/O Return“, on J4-5 for example. These are general purpose analog outputs. The output voltage range is ± 5 V with a resolution of 10 V / 256 = 0.039 V. The source impedance is 1 kΩ, giving a short-circuit current of ± 5 mA compared to I/O Return. Monitor outputs are updated at the velocity loop update rate. There is a 10-kHz analog lowpass filter on these outputs.

One of a number of internal variables can be mapped to each analog monitor output. Variables `DM1Map` or `DM2Map` can be used to define which of the following variables shall be represented at the analog monitor outputs (DM1 or DM2) in the form of analog voltages. The scale factor of the output signal and the frequency of a lowpass filter are separately adjustable on each monitor output using software parameters `DM1Gain, DM1F0` for Monitor 1 and `DM2Gain, DM2F0` for Monitor 2. Table 1 lists the possible signal assignments to each monitor output. Variables marked * are not range clamped, and are allowed to wrap around when the value of the voltage range is exceeded. Other variables are not allowed to overflow and their outputs are clamped at maximum when the DAC monitors exceed the range.

**Table: Monitor assignment**

| DM1Map or DM2Map | Variable | Description | Output unit |
|---|---|---|---|
| 0 | AnalogOutx | Freely programmable DC voltage value | 1 V / V |
| 1 | VelFB | Measured velocity signal (default for DM2) | 1 V / kRPM |
| 2 | VelCmdA | Actual velocity command | 1 V / kRPM |
| 3 | VelErr | Velocity error | 1 V / kRPM |
| 4 | FVelErr | Compensated velocity error | 1 V / kRPM |
| 5 | Position | Measured position * | 1 V / Rev. |
| 6 | PosError | Position error * | 1 V / Rev. |
| 7 | PosCommand | Commanded position * | 1 V / Rev. |
| 8 | ICmd | Commanded torque current | 1 V / A |
| 9 | IFB | Measured torque current (default for DM1) | 1 V / A |
| 10 | AnalogIn | Filtered A/D input | 1 V / V |
| 11 | EncFreq | Encoder frequency | 1 V / Hz |
| 12 | EncPos | Encoder position * | 10 V / 4096 Pulse |
| 13 | ItFilt | Filtered output current amplitude | 1 V / 100 % |
| 14 | HSTemp | Measured heat sink temperature | 1V / °C |
| 15 | | Commutation electric angle * | 1 V / Cycle |
| 16 | IR | Motor phase R output current | 1 V / A |
| 17 | IS | Motor phase S output current | 1 V / A |
| 18 | IT | Motor phase T output current | 1 V / A |
| 19 | | Motor phase R voltage duty cycle | 1 V / 100 % |
| 20 | | Motor phase S voltage duty cycle | 1 V / 100 % |
| 21 | | Motor phase T voltage duty cycle | 1 V / 100 % |
| 22 | VBus | Drive DC bus voltage | 1 V / V |
| 23 | ResPos | Resolver absolute position * | 1 V / Rev. |
| 24 | | Commanded non-torque current | 1 V / A |
| 25 | | Measured non-torque current | 1 V / A |
| 26 | | Torque voltage duty cycle | 1 V / 100 % |
| 27 | | Non-torque voltage duty cycle | 1 V / 100 % |
| 28 | VelCmd | Velocity command | 1 V / kRPM |
| 65536 | | No change to variable selection, turn range clamp off | |
| 65537 | | No change to variable selection, turn range clamp on | |

***)** These variables are allowed to wrap around when the signal exceeds the output voltage range


Eduard BAUTZ GmbH + Co.KG, D-64331 Weiterstadt, Tel. +49-6151-8796-10, Fax +49-6151-8796-123

## 8.14 LEDs

**LEDs:** Front side LEDs for “DC Bus voltage” and “Regeneration circuit active” are provided on model SCE9x6 and SCE9x7 only.

„Regeneration“: Lit, when regeneration circuit active, discharging energy fed back by the motor while braking.

„Power“: Lit, when DC bus voltage is present.

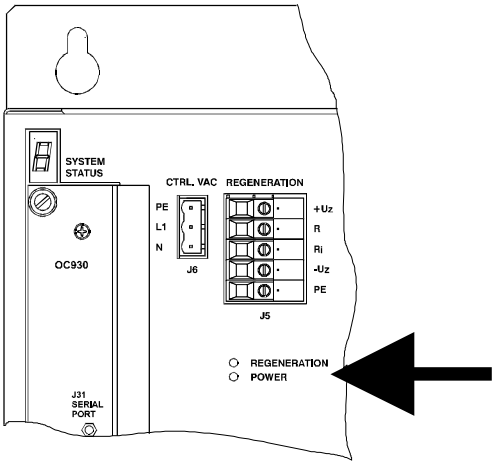


Figure shows SCE9x6, similar with SEC9x7

# 9 Startup

**WARNING:**
**Do not switch on yet!**
**When first powering up, it is essential that the motor is not coupled to the load. A faulty connection could cause uncontrollable operation of the motor. Make sure that it does not fall if there is rough running.**

**Option card**

SCE900 devices are delivered ex-factory in their unconfigured state. When first connected, they output the message "U C" to the LED status display and the drive is disabled.

Starting up a basic device requires an option card.

**CAUTION!**
**Do not plug in or remove option cards unless the power to J1 and J6 has been turned off!**

In most cases this will be the serial interface option card OCE930.

**Startup is substantially the same with other option cards.**

Once the setup parameters have been stored in the basic unit, an OCE930 option card can be removed again if necessary. The same card can then be used for setting up other axes.

**Option card manual**

An accessory for the 0CE930 option card is manual MAE930-D (German) or MA930-E (English). The manual for the OCE930 option card is supplied with a diskette containing the "930 Dialog“ interface utility program, which runs on IBM compatible PCs.

**"930 Dialog" program for OCE930**

The program is delivered on a 3.5“ diskette and runs under Windows®. It has online help which provides information on all parameters (in English).
The manual for the OCE930 option card tells you all you need to know about installing the option card, the circuit diagram for the necessary interface cables, how to install the program, guides you through the menus in 930 Dialog, and provides the complete information on all parameters. Use this manual to take you through starting up.
Running automatic setup in the communications program will make it easy for you to configure the drive.

**Additional information**

On powering up the drive the 7 segment LED for the status display shows "P A C S C I", pause, "–", pause, then the digital communications address, if any, in HEX, followed by any display that is specific to each option card, and then the LED display shows the appropriate operational status. However, the drive is fully operational well before the last power-up message. Proper operation typically starts less than 0.75 seconds after the control power supply is up. This roughly corresponds to the time it takes for the "A" in "P A C S C I" to appear in the display. Booting the drive software after powering up the control power supply is rather similar to booting up a PC, with the drive control card


Eduard BAUTZ GmbH + Co.KG, D-64331 Weiterstadt, Tel. +49-6151-8796-10, Fax +49-6151-8796-123

like a hard disk and the option card like a floppy. If the drive has no option card or the option card has no drive parameters on it, the drive uses the parameters on the control card. However, if there is an option card plugged in that has parameters on it, the drive uses these and the power-up message on the status LED will include "o P t" after the HEX communications address. This capability allows an option card to fully reprogram the base servodrive as needed, and even means you can buy a standard option card with the latest drive software and field upgrade an earlier version.

---

**Reducing output power:**

Where cables are long it is necessary, even when a filter is present, to reduce drive output power:
Reduce continuous output power linearly by 0.5 % for each meter of motor cable in excess of 10 meters by altering the variable `ItThresh`.

**For example:**
**Cable length 50 meters:**
**(50m—10m)×0.5 %/m=20% or 1/5.**
**Therefore subtract 1/5 from the typical `ItThresh` value for the drive.**
**The typical `ItThresh` value for the drive is 55%.**
**Deduct 1/5 from this. Then: `ItThresh` (new) is 44%.**

**Reference values**

| Cable length | Variable `ItThresh` |
|---|---|
| 15 m to 25 m | 51 % |
| 25 m to 35 m | 48 % |
| 35 m to 45 m | 45 % |
| 45 m to 50 m | 44 % |

---

**WARNINGS:**

**<u>Before</u> coupling the motor to the load,**
**make sure:**

- **that the limit switches must stay activated all the remaining travel way behind the switch to be sure of preventing the shaft from accelerating in the inhibited direction again,**
- **that the limit switches are responding,**
- **that they are assigned to the proper direction,**
- **that they cause the motor to decelerate quickly enough.**

- **that the external position controller (indexer) being used, if any, is operating properly!**
  **Wrongly connected position feedback can cause the drive to run away at maximum rotation velocity.**

- **that if a drive fault occurs it will be controlled and brakes will cut in if necessary.**

- **that the emergency stop equipment is operating and**
- **<u>that releasing the emergency stop equipment will never lead to uncontrolled axis movements.</u>**

# Appendix 1: Troubleshooting

**Troubleshooting tables**

**You can find a table with problems, possible causes and remedies in Appendix D of Manual MAE930-E,**
or
**in Manual MA950: Chapter 5 Maintaining/Troubleshooting.**

**It supplements the list of fault messages, which can be found in the manuals themselves in the section about the variable** `FaultCode`.

**The diagnostic information displayed by the 7-segment LED is available over the digital communications link if applicable.**

**Fault recognition and protection circuits**

The drive is fully protected against "normal" kinds of misuse. On the front panel it has a 7-segment LED display to indicate status. The basic device has the following specific protective indications:

1. Motor output short-circuit recognition phase to phase and phase to ground.
2. Analysis circuit for measuring motor temperature and detecting overtemperature on Pacific Scientific motors in the R series (with PTCs) or for detecting motor overtemperature on Pacific Scientific / Bautz motors in the M and F series.
3. Internal measurement of power stage heat sink temperature for monitoring excessive drive temperature.
4. DC bus overvoltage recognition.
5. Bus low voltage fault message, adjustable switching threshold.
6. By reference to the measured heat sink temperature, the drive can output an $I \times t$ fault message for excessive current. This fault indication limits the maximum permitted time for the peak current and intelligently lowers the continuous current fault trip to promptly limit the continuous output current dependent on the heat sink temperature.
7. Control power supply low voltage detection.
8. Auxiliary voltage output + 5 V is short-circuit proof compared to I/O Return.
9. If a drive is connected to the mains without valid personality parameters, the power stage cannot be enabled. The drive is unharmed.
10. If an option card is plugged in during startup and then removed whilst power is still up, the drive will fault.
11. The Digital Signal Processor has a watchdog/throughput fault recognition to detect drive software errors.

**Sequence of operations**

The following sequence of operations will occur if the protection circuits discover a fault:
The source of the fault is recognized, the power stage is disabled, the Fault mappable output function is activated, the status LED indicator displays the relevant fault by means of a flashing code, and optionally (depending on the particular option card) a fault message is sent out the digital interface port. The faults are reset by activating the input "Fault Reset" or by switching off and on the control power supply on J6.


Eduard BAUTZ GmbH + Co.KG, D-64331 Weiterstadt, Tel. +49-6151-8796-10, Fax +49-6151-8796-123

**Status display LED**

A detailed list of the possible 7 segment status LED displays can be found in the following table. Please note that in the case of the basic device the decimal point on the LED is not used; it is reserved for use with option cards. A flashing display indicates a serious fault. If the display is not flashing it is steady or alternating. If the message consists of several characters, the display shows these one after the other, with pauses of different lengths between them to help indicate the intended character order.

**Status**

| **Status display LED** | **This is <u>not a fault</u>!** |
|---|---|
| Steady 0 | No faults, power stage disabled, bus voltage OK. |
| Steady 8 | No faults, power stage enabled, bus voltage OK. |
| Alternating 8 and ┐ | No faults, power stage enabled, `CwInh` (Clockwise Inhibit) active preventing CW motion. |
| Alternating 8 and ┌ | No faults, power stage enabled, `CcwInh` (Counterclockwise Inhibit) active preventing CCW motion. |
| Alternating 8 and ┬ | No faults, power stage enabled, `CcwInh` and `CwInh` both active preventing motion.<br>(Clockwise **and** Counterclockwise Inhibit) |
| Alternating U and C | Unconfigured drive |

**Exception**

If `VbusThresh` = -1 (default), the bus undervoltage fault (alternating E and 1) is disabled.
That means: Under the following condition the SCE's power stage is not activated, in spite the SCE reports `Enabled`=1 and the Status display LED shows no fault:

- With the SCE9x3/9x3A3/9x4/9x5, when the DC Bus Voltage is not present (Main power supply on J1 missing), resp.
- with the SCE9x6, when the DC Bus voltage is <100 V (Main power supply on J1 <70 V AC)

**Fault codes**

| **Status display LED** | **Fault type** |
|---|---|
| Flashing 1 | Measured velocity `VelFB` too high.<br>Loose or open circuit wiring to the resolver feedback connector J3.<br>Actual motor speed exceeded 1,5 × (Max of \|`VelLmtLo`\| or \|`VelLmtHi`\|) or 21000 $min^{-1}$ which is the over speed trip level. For Encoder velocity and encoder position feedback (`RemoteFB` = 2) make sure that `EncIn` is set to the proper value so that scaling of `Kpp`, `Kvp`, and `VelFB` will be in the default units. Check variable "`ExtFault`" |
| Flashing 2 | Motor overtemperature.<br>Loose or open circuit wiring to motor PTC thermal sensor (J3-8 & J3-9).<br>High ambient temperature at motor.<br>Insufficient motor heat sinking from motor mounting.<br>Operating above the motor's continuous current rating.<br>Inoperative cooling fan. |

Continued on next page

**Fault codes**
**continued**

| | |
|---|---|
| Flashing 3 | Servodrive overtemperature.<br>High drive ambient temperature<br>Restriction of cooling air due to insufficient space around unit.<br>Operating above the drive's continuous current rating.<br>Inoperative cooling fan.<br>***Note:*** *See* `HSTemp`, `ItFilt`, *and* `ItF0` *for information on measuring thermal margin in an application.* |
| Flashing 4 | Servodrive reporting I×t fault.<br>Mechanically jammed motor<br>Motion profile acceleration too high.<br>Machine load on the motor increased perhaps by a friction increase.<br>Problem with wiring between drive and motor yielding improper motion.<br>Drive and/or motor under sized for application.<br>***Note:*** *See* `HSTemp`, `ItFilt`, *and* `ItF0` *for information on measuring thermal margin in an application.* |
| Flashing 5 | Unassigned. |
| Flashing 6 | Internal ±12V control voltage too low, detected by control board<br>Insufficient control AC voltage on J6.<br>External short on signal connector J4.<br>Internal drive failure. |
| Flashing 7 | Excessive power stage current, or bus voltage too high.<br>Motor power wiring short circuit line-to-line or line-to ground/neutral on J2<br>Internal motor winding short circuit.<br>Insufficient motor inductance for output over current faults.<br>Motor AC power input voltage too high.<br>Disconnected regeneration resistor on J5.<br>External regeneration resistor ohmage too small for Bus overvoltage fault.<br>Internal ±12 V control voltage too low, detected by power board hardware |
| Flashing 9 | Regeneration circuit or resistor overloaded (not on all types of servodrive) |
| Flashing A | Digital Signal Processor has detected overvoltage in the DC bus.<br>Actual bus overvoltages are usually, but not always detected and displayed as a flashing 7 fault, see that entry for more information. |
| Flashing b | Auxiliary +5V voltage too low.<br>Short circuited wiring on the output (J4-25).<br>Load exceeds the current rating of this supply. |
| Flashing C | Unassigned |
| Flashing d | Unassigned |
| Steady E *) | Processor throughput fault |
| Flashing E*) | Voltage drop out in the control power supply or power up self test failure.<br>To further identify this fault see software variable `ExtFault`:<br>`ExtFault` = 1 Calibration data corrupted<br>`ExtFault` = 2 Excessive DC offset in current feedback sensor<br>`ExtFault` = 3 DSP incompletely reset by power line dip<br>`ExtFault` = 6 Excessive DC offset in Analog Command A/D<br>`ExtFault` = 7 Unable to determine option card type<br>`ExtFault` = 8 DSP stack overflow<br>Continued on next page |

*) These faults cannot be reset with `FaultReset` and require the line control power to be cycled.


Eduard BAUTZ GmbH + Co.KG, D-64331 Weiterstadt, Tel. +49-6151-8796-10, Fax +49-6151-8796-123

**Fault codes continued**

| | |
|---|---|
| | `ExtFault` = 10 Software and control ASIC incompatible<br>`ExtFault` = 11 Actual model not same as stored in NV memory<br>`ExtFault` = 12 Unable to determine power stage<br>`ExtFault` = 15 RAM failure<br>`ExtFault` = 16 Calibration RAM failure |
| Alternating E and 1 | DC bus undervoltage, or bus voltage less than set by `VbusThresh`.<br>Check the measured bus voltage `VBus` and the fault threshold `VbusThresh` to make sure they are consistent. |
| Alternating E and 2 | Ambient temperature below drive specification. |
| Alternating E and 3 | Fault on initializing encoder commutation (only possible if `CommSrc`=1); see also `Enable2`.<br>Problems with encoder feedback wiring to J4 when `CommSrc`=1.<br>Load inertia more than 100 times the motor inertia leading to settling times long compared to the 2 second encoder commutation alignment; artificially extend the alignment time by pulsing the hardware Enable (J4-6). |
| Alternating E and 4 | Versions of the software and nonvolatile memory incompatible.<br>OC(E)930-001-01 (drive software upgrade card) was used to set up an old drive. Then either no or a standard OC(E)930-001-00 (no software upgrade option card) is installed, resulting in the old software being used in the drive. |
| Alternating E and 5*) | Control card hardware not compatible with software version.<br>Resolver cable wired incorrectly:<br>Remove resolver cable and cycle power. If E5 fault remains, return drive for repair. If E5 fault goes away, check resolver wiring. Connecting either the plus or minus excitation to the PTC can cause this problem. |
| Alternating E and 6 | Attempt to configure drive in enabled status.<br>Unconfigured drive (Status LED alternate U, C after power-up) was fully configured with the drive motor power enable active. This fault can be reset or the control ac power cycled to get the drive-motor operating. |
| Alternating E and 7 | `AInNull` (see section) twice triggered at too short intervals.<br>The `AInNull` function was re-activated too soon after going inactive.<br>This can be caused by switch bounce on the input pin mapped to activate `AinNull`. |
| Alternating F and 1 | Position following error too large.<br>The motor is either stalled or partially jammed or the value for `PosErrorMax` is set too sensitive for the loop tuning and commanded motion profiles. |
| Alternating F and 3 | Parameter Checksum Error, parameters cannot be stored (Memory fault).<br>Glitch while last saving the NV parameters.<br>Swapped option card has corrupted NV memory contents.<br>Hardware problem with the NV memory.<br>See `ExtFault` status variable to determine whether NV memory corruption is inside the drive or on the option card.<br>`ExtFault` = 13 Control card non-volatile parameters corrupt.<br>`ExtFault` = 14 Option card non-volatile parameters corrupt.<br>Re-download parameters to restore drive operation |

*) These faults cannot be reset with `FaultReset` and require the line control power to be cycled.

# Repair

If you come to the conclusion that your drive, option card or motor is faulty, please proceed as follows:

There are no user serviceable parts inside the drive, option cards or motors.

If you are customer of a machine building company that is incorporating products from Pacific Scientific or BAUTZ into their machine:
Please ask this machine building company for spare parts, and not to the nearest Pacific Scientific - Distributor. Often machine building companies do alternations to our products - especially to motors - without informing Pacific Scientific. This makes exchange parts delivered by a Pacific Scientific – Distributor incompatible when you attempt to use them as spare part in such a machine, in spite you ordered the right product according to the name plate of the original part.

If you purchased the products from a distributor, please apply to exactly this distributor. He will tell you the fastest way for repair and Exchange.

**Note for customers in the USA:** *Please do not attempt to send material to Pacific Scientific Divisions in the USA without having a valid RMA- Number. Parcels without valid RMA- Number will be returned to sender. Please proceed like said above.*

Manual MAE 900-E
for the SCE900 series
**Appendix 2**
Inrush current limitation

# Appendix 2
# Application Note: Inrush Current Limitation

See next page

# Inrush Current Limitation
## for
## SCE 903, 903A3, 904, 905 and DSK12-C8

In the case of servodrives in the 1 to 7 kW range, all commercially active manufacturers have succeeded in providing inrush current limitation with NTC thermistors as state of the art. These are semiconductors with the property of having a resistance with a **N**egative **T**emperature **C**oefficient. These components have succeeded due to the need for small dimensions and because of their operating safety. For this reason these semiconductors are also used in drives SCE903A3, SCE903, SCE904, SCE905 and DSK12-C8.

There is still the need to charge an empty energy store on the device (in this case the bus capacitor) when powering up. This energy store is for smoothing the bus voltage and for supplying peak power to the motor when demanded. It also smoothes power consumption from the mains.

At power up the resistance of an empty capacitor is infinitesimally small. If DC voltage is switched to a capacitor, the inrush current is limited only by the line resistance and the internal resistance of the power supply (in this case: mains, possibly transformer, and mains rectifier).

The inrush current to the empty bus capacitor in servodrives of this kind can be limited in various ways:

1. A series resistor bridged by a contactor when the DC bus voltage has risen,
2. An inrush current inductance to limit current rise,
3. A partially controlled rectifier bridge using thyristors,
4. NTC thermistors.

In power supply networks, especially in industrial installations, efforts are made to achieve the smallest possible internal resistance, i.e. few voltage drops under load and low power losses. The internal resistance of the network is increased by an inductance or by an isolating or auto transformer in the drive's power supply.

An alternative possibility is to decide for reasons already mentioned to increase the internal resistance of the network and use NTCs with small drives (in the 1 to 7 kW range). This is a cost-effective and highly reliable solution.

Figure 1 shows the configuration diagram for the soft startup circuit on our AC servodrives.

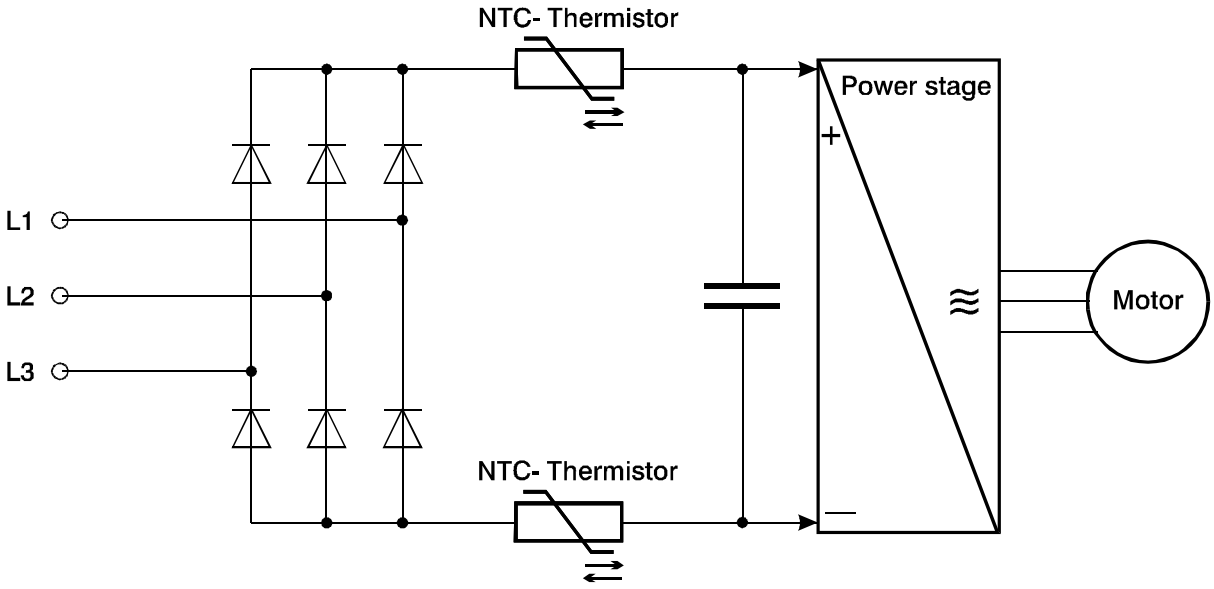


Figure 1

All the drives mentioned use NTC thermistors, i.e. resistors with negative temperature coefficients, made by Epcos or by Rhopoint.
:

| Drive type | Thermistor type | Resistance at 25 °C in Ohms |
|---|---|---|
| DSK12-C8 | S364 – 2.0 – M (Epcos) | 2.0 |
| SCE903A3 | SG40 (Rhopoint) | 10 |
| SCE903 | SG40 (Rhopoint) | 10 |
| SCE904 | SG64 (Rhopoint) | 7 |
| SCE905 | SG32 (Rhopoint) | 4 |

For example, each thermistor in a DSK has the following characteristics:

| | |
|---|---|
| at 25 °C | a resistance of 2.0 Ohm ± 20 % |
| at 40 °C | a resistance of 1.26 Ohm ± 20 % |
| at 50 °C | a resistance of 0.95 Ohm ± 20 % |
| at 100 °C | a resistance of 0.28 Ohm ± 20 % |
| at 180 °C | a resistance of 0.047Ohm ± 20 % |

The resistance of an empty capacitor is infinitesimally small. Therefore unless initial current flow is limited, very high inrush currents flow, which die away as the capacitor loading increases. The inrush current is limited by the thermistors. During operation of the drive the NTC thermistors heat up and their resistance is lowered. Therefore after switching off, a certain period of time must be allowed for the thermistors to cool down, so that they will limit the inrush current when the drive is powered up again.

In normal circumstances around 3 minutes is enough time.

Problems may arise if:

- the ambient temperature in the cabinet is high, or
- the 3 minute waiting time is not practicable for the application.

If the time cannot be guaranteed, the following problems may occur:

- power supply contactor switches may be overloaded, leading to
- welding of switch contacts,

**!!! This is a safety-related matter, since in the event of an emergency stop, it may become impossible to switch of the power supply!!!**

- mains fuses may blow,
- damage may be caused to the drive's mains rectifier.

To limit inrush current still further, we recommend that you fit the following circuit in appropriate cases:

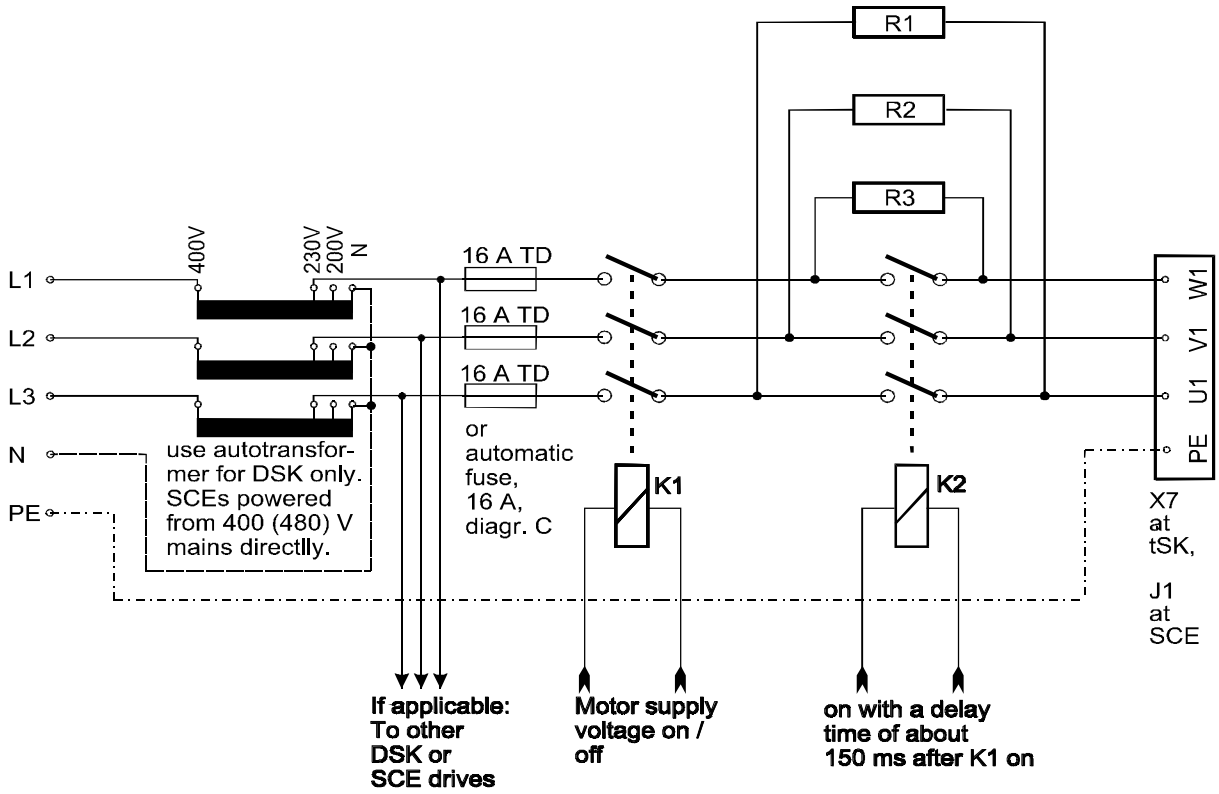



Eduard BAUTZ GmbH + Co.KG, D-64331 Weiterstadt, Tel. +49-6151-8796-10, Fax +49-6151-8796-123

For resistors R1, R2 and R3 we suggest a value of about 15 Ohms.

Due to the high peak loads that these resistors have to stand it is recommend that each be fitted with three high duty, wire wound resistors in series. For example, we find that suitable resistors of this type can be obtained from the manufacturers Vitrohm; they are series KV, type 212 - 340, rated 4.7 Ohms, 10%, giving 14.1 Ohms each for R1, R2 and R3.
The manufacturer's address is:
Deutsche Vitrom GmbH & Co. KG,
Siemensstr. 7 - 9,
D-25421 Pinneberg,
Tel. +49 4101 7080, Fax +49 4101 722 787.

We recommend using 16 A types for contactors K1 and K2.

Using this circuit, the interval between switching the amplifier off and powering it up once more may be short.

But remember that these resistors take up a heavy load during the power up procedure. The resistors need time to cool down between one power up and the next. Multiple powering up and down will destroy this circuit.

# Appendix 3
# Safety and operating instructions

See next page


Eduard BAUTZ GmbH + Co.KG, D-64331 Weiterstadt, Tel. +49-6151-8796-10, Fax +49-6151-8796-123

Safety and operating instructions
for drive controllers
(in accordance with low voltage directive 73/23/EEC)

**1. General**

In operation, drive controllers may have live, uninsulated and possibly also moving or rotating parts, as well as hot surfaces, depending on their degree of protection.

In the event of inadmissible removal of the required covers, improper use, wrong installation or incorrect operation, there is the danger of serious personal injury and damage to property.

For further information, see documentation.

All operations serving transport, installation and commissioning (startup) as well as maintenance are to be carried out by skilled technical personnel (in accordance with IEC 364 or CENELEC HD 384 or DIN VDE 0100 and IEC 664 or DIN/VDE 0110 and national accident prevention rules).

For the purpose of these basic safety instructions, skilled technical personnel means persons who are familiar with the installation, assembly, startup and operation of the product and have the qualifications needed for the performance of their duties.

**2. Intended use**

Drive controllers are components designed for inclusion in electrical installations or machinery.

In the event of installation in machinery, commissioning of the drive controller (i.e. the starting of normal operation) is prohibited until the machine has been proved to conform to the provisions of directive 89/392/EEC (Machinery Safety Directive - MSD). Account is to be taken of EN 60204.

Commissioning (i.e. the starting of normal operation) is admissible only where conformity with the EMC directive (89/336/EEC) has been established.

The drive controllers meet the requirements of low-voltage directive 73/23/EEC. They are subject to the harmonized standards of the series EN 50178 / DIN VDE 0160 in conjunction with EN 60439-1 / VDE 0660, part 500, and EN 601 46 / VDE 0558.

The technical data as well as information concerning the supply conditions shall be taken from the rating plate and from the documentation and shall be strictly observed.

**3. Transport and storage**

The instructions for transport, storage and proper use shall be complied with.

The climatic conditions shall be in conformity with EN 50178.

**4. Installation**

The installation and cooling of the appliances shall be in accordance with the specifications in the pertinent documentation.

The drive controllers shall be protected against excessive strain. In particular, no components must be bent or isolating distances altered in the course of transportation or handling. Electronic components and contacts shall not be touched.

Drive controllers contain electrostatically sensitive components which are liable to damage through improper use. Electric components must not be mechanically damaged or destroyed (potential health risks).

**5. Electrical connection**

When working on live drive controllers, the applicable national accident prevention rules (e.g. VBG 4) must be complied with.

Electrical installation shall be carried out in accordance with the relevant requirements (e. g. cross sectional areas of conductors, fusing, PE connection). For further information, see documentation.

Instructions for installation in accordance with EMC requirements, like shielding, grounding, location of filters and wiring, are contained in the drive controller documentation. They must also always be complied with in the case of drive controllers bearing a CE - marking. Observance of the limit values required by EMC law is the responsibility of the manufacturer of the installation or machine.

**6. Operation**

Installations which include drive controllers shall be equipped with additional control and protection devices in accordance with the relevant applicable safety requirements, e.g. law on technical equipment , accident prevention rules etc. Changes to the drive controllers by means of the operating software are admissible.

After disconnection of the drive controller from the voltage supply, live appliance parts and power terminals must not be touched immediately because of possibly energized capacitors. In this respect, the corresponding signs and markings on the drive controller must be respected.

During operation, all covers and doors shall be kept closed.

**7. Maintenance and servicing**

Comply with the manufacturer's documentation.

***☞Keep these safety instructions in a safe place!***

# Alphabetical Index

## G



## H



## I



## J



## L



## M



## N



## O



## P

## R



## S



## T



## U



## V



## W



## Z