Reference Manual

AC SERVO DRIVE UNIT

DSK 12

Eduard Bautz GmbH
Motors and Controls
Robert-Bosch-Str. 10
Postfach 1264 (D-64321)
D-64331 Weiterstadt
Tel.: +49-61 51-87 96-10
Fax: +49-61 51-87 96-123

02/98

BAUTZ

Our product and the manual are subject to improvements without notice.

At the time of printing, the information in the manual is according to the best of our knowledge, yet strictly informative.

Edition 02/98, previous editions: 01/94

For technical information, please call: (+49)-6151/8796-168

Table of Contents

1 General

1.1 Product Concept

The drives of the DSK series are meant to control the rotational speed and the torque of AC servo motors, i.e three-phase, synchronous motors excited by permanent magnets. These drives allow acceleration and deceleration in both directions (four-quadrant operation). They are able to commutate the current in the motor phases sinusoidally. For feedback a certain kind of resolver with correct alignment to the rotor is necessary. The current control circuits as well as the speed control circuits of the drive are built in analogous technique. As nominal value for the rotational speed serves a voltage in the range of ± 10 V, which normally comes from an external position controller.
For feedback to the external position controller the amplifier in its basic version simulates an encoder with 1024 pulses per revolution. For that reason an external encoder can be dispensed with in most cases. The drive can work directly from the single-phase 230 V_{AC} mains without a transformer, if the motor does not have to deliver a continuous power of more than 1 kW. If the load requires more motor power, use a transformer that generates 3 x 230 V_{AC} from a three-phase mains. The drive incorporates a soft-start circuit to limit the starting current. The power rectifier generates a DC voltage of 310 V_{DC}, smoothed by capacitors. These capacitors absorb the back EMF of the motor. If the bus voltage increases, the power dump circuit becomes active and converts the braking power into heat by means of the internal resistors. The internal brake resistors are designed for 50 W continuous duty, but can be overcharged extremely for short periods of time.
The auxiliary voltages for the electronic circuits are internally isolated from the motor supply. To feed them, there is a separate auxiliary supply voltage input for the 230 V_{AC} single phase mains. In case of an "emergency stop" situation, only the motor supply voltages can be switched off, while all outputs including those of the simulated encoder remain active.
A brake relay is provided to control the holding brake of a motor by an external auxiliary contactor. All inputs and outputs as well as the supply voltages and the motor connections are placed at the bottom of the DSK unit. All cables connect to plug-in type screw terminals. The simulated encoder output is a Submin-D-Connector.
Analog monitor signals exist on test pins behind the front cover. They deliver a tachometer voltage as motor velocity information and a current monitor signal to be used as torque information, corresponding to the internal current command signal. The pulse width modulation (PWM) of the bus voltage generates the motor currents in the power stage. The power stage is protected against short circuits both phase to phase and phase to ground. All control parameters are adjustable by potentiometers. Additionally, the control parameters can be defined on personality modules to minimize set-up and service time.

1.2 Block Diagram

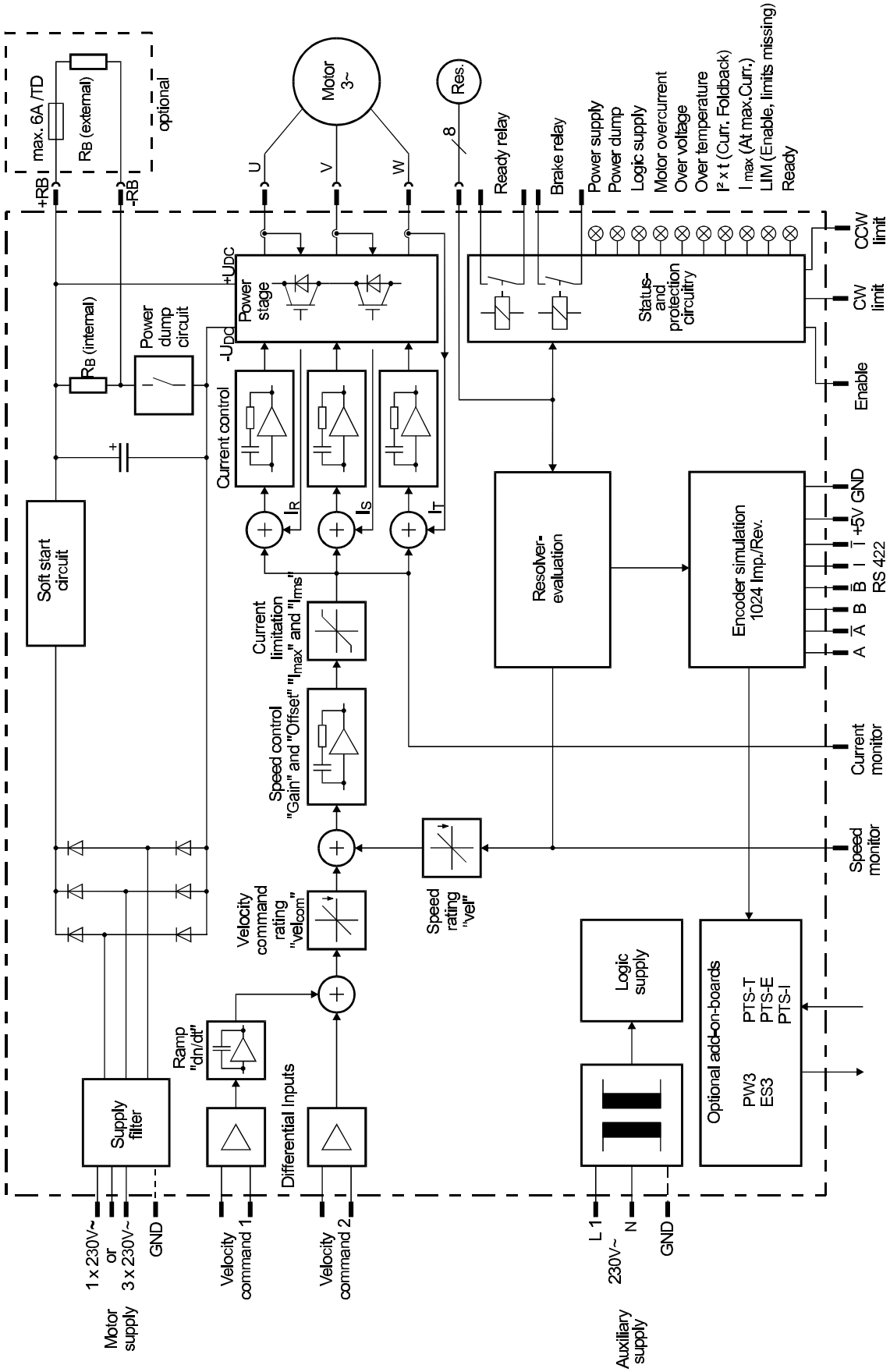

1.3 Safety Regulations

Please observe the safety regulations mentioned in chapter 3: "Installation" and chapter 5: "Set-Up Procedure" in order to avoid damages and hazards. Please read also the “Safety and operating instructions for drive converters” added in the appendix of this manual.

The installation of the drive and all connected devices should only be performed by skilled and qualified staff with basic knowledge of electrics.
The set-up procedure should only be performed by specialised staff with a broad knowledge of electrical engineering and motion technology.

Our technicians will assist you in the set-up procedure of the drive and the training of your personnel upon request.

1.4 Order Code

A label inside the front door shows the type of your drive according to the following type designation:

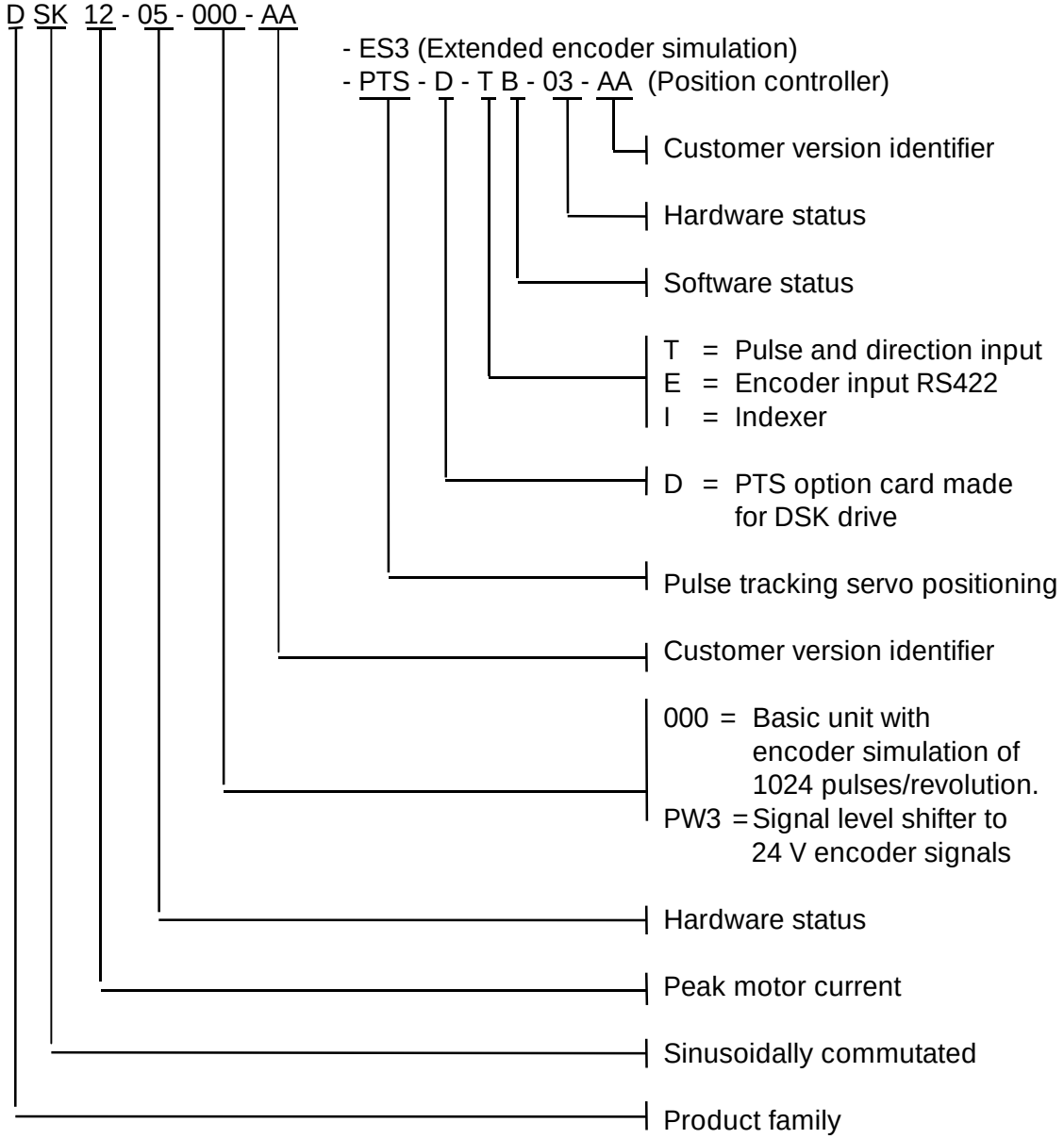

When a PTS-xxx positioner is fitted, **no** PW3 or ES3 option can be added.

Examples:

1. Basic unit:
   DSK12-03-000-AA
2. Standard unit with options: Signal level shifter and extended encoder simulation:
   DSK12-03-PW3-AA-ES3
3. Standard unit with option: Pulse tracking servo, pulse and direction type:
   DSK12-03-000-AA-PTS-D-TB-03-AA

2 Technical Specifications

2.1 Electrical Specifications

Voltages

Rated supply voltage	$3 \times 230\ V_{AC}$ (use auto-transformer). Single-phase $230\ V_{AC}$ supply is possible with limited performance.
Range of supply voltage (single-phase or three-phase)	$175–245\ V_{AC}$
Auxiliary voltage supply	$1 \times 230\ V_{AC} \pm 10\ \%$
DC bus voltage	$240–350\ V_{DC}$
Output voltages	$0–210\ V_{AC}$

Maximum Charge of the Auxiliary Voltages

+15 V on XA1-5	8 mA
+15 V on XB1-11	10 mA
–15 V on XB1-12	10 mA

Torque Control

PWM clock frequency	9.8 kHz
Bandwidth of current control	> 2 kHz
$I^2 \times t$ limit	If I_{max} is set to $2 \times I_{rms}$, the current is reduced to I_{rms} after 500 ms. LED signal will be stored.
Current limitation I_{max}	adjustable from 0 A to 17.6 A_{RMS}
Current limitation I_{rms}	adjustable from 0 A to 8.8 A_{RMS}
I_{max} setting overrides I_{rms} setting.	
Torque limitation I_{max} external	Analog input $0–10\ V_{DC}$

Motor Current and Performance

Rated continuous current [sinus peak]	12.5 A
Rated continuous current [RMS value]	8.8 A
Max. peak current [sinus peak]	25 A
Max. peak current [RMS value]	17.6 A
Continuous output power	3 kW
Peak output power	6 kW

Three-phase supply (e.g. by an auto-transformer) is necessary for a continuous output power of more than 1 kW.

Velocity Control (PI Control)

Speed (tacho) rating	adjustable
Gain (influences P and I portion)	adjustable
Velocity command rating	adjustable
Offset alignment	adjustable
Ramp integrator command	Adjustment range: 50–500 ms / 10 V step

Protection Circuits

Overvoltage monitor	Disables drive at bus voltage > $400\ V_{DC}$
Heat sink sensor	Disables drive at 85°C
Thermal motor protection	Input for an isolated thermo switch, open circuit disables drive.
Other protection circuits	Extensive fault circuits provided

	Velocity Command Inputs (R_i = 10 kΩ)
Input 1	± 10 V velocity command via ramp generator ramp adjustable from 50–500 ms / 10 V at potentiometer "dn/dt".
Input 2	± 10 V differential amplifier input
Auxiliary voltage for velocity command inputs	± 15 V / 10 mA provided

Logic Inputs (PLC compatible; 11–33 V)

Enable	Active "high" enables the drive
Limit switches (right and left)	Direction-sensitive inputs produce active stop on "low" or open circuit.
Reset	Resets errors, active at positive slope, bears max. 10 ms "high" level only.

Relay Outputs

(Normally open contacts, rated 24 V; 0.5 A, non-inductive load)

Ready relay	Drive ready (but not necessarily enabled)
Brake relay	Only to drive an auxiliary contactor for the motor holding brake.

Monitors

(Test jacks behind the front door)

Current monitor output	10 V corresponding to 17.6 A_{RMS} motor current
Velocity monitor output	1.5 V corresponding to 1,000 RPM

Power Dump

Internal shunt resistors rated for 50 W continuous braking power are integrated. If more braking power is requested, connect an external power dump resistor > 22 Ω.

Encoder Simulation (Standard Drive)

External supply	5 V, ± 10 %, 100 mA
Encoder resolution	1024 lines/rev. (gives 4096 imp/rev. with encoder quadruplication)
Output level	5 V to RS-422

2.2 Additional Information

Mating Connectors

XA1	Phoenix-MINI-COMBICON MC1,5/8-ST-3,81
XB1	Phoenix-MINI-COMBICON MC1,5/12-ST-3,81
X2, X4	Phoenix-MINI-COMBICON MC1,5/2-ST-3,81
X3	Phoenix-MINI-COMBICON MC1,5/9-ST-3,81
X5, X7	Phoenix-POWER-COMBICON PC4/4-ST-7,62
Codification for X5, X7	Phoenix CP-HCC4
X6	Phoenix-POWER-COMBICON PC4/3-ST-7,62
X8	Phoenix-COMBICON MSTB2,5/3-ST-5,08
Encoder socket:	Submin-D, 15 poles, male connector

Mechanical Data

Weight	5.2 kg
Dimensions (h × w × d)	279 × 77 × 303 mm (cp. chapter 3.2)
Clear space	150 mm below the drive for cabling and optional cable holder, 50 mm space on top, 5 mm space on the left side.

Environmental Conditions

Mounting position	Vertical
Ambient temperature	0–40°C on duty / humidity non-condensing
Convection cooling	Sufficient up to 2 kW continuous output power
Forced air cooling	For continuous output power of more than 2 kW, approx. 3 m/s air flow on the heat sink is required. No abrasive or conducting dust allowed. Ventilation of cabinet has to be filtered.
Max. altitude	1000 m above MSL, above that, the rated power has to be reduced.

Connectable Motors

Preferably BAUTZ motors of the M and F series. Generally, AC servo motors with 2, 3, 4, 8 pole pairs, designed for sinusoidal commutation.
For feedback these motors must be equipped with a correctly aligned low-impedance resolver.

Resolver data:

Transformation ratio 0.5
Excitation frequency 10 kHz
Supply voltage 7.5 V_{RMS} . (e.g.Litton SSBH-15)

3 Installation

3.1 Safety Regulations

In Germany, valid VDE regulations have to be observed, especially the ones listed below. In other countries, there are similar regulations. It is your responsibility and qualification to know and apply them.

- VDE 0100 or IEC64 (Regulation for the Erection of Power Installation with Rated Voltages Below 1000 V).
- VDE 0113 or IEC 204-1 (Regulation for the Electrical Equipment of Industrial Machines).
- VDE 0160 (Electronic Equipment for Use in Electrical Power Installations and Their Assembly into Electrical Power Installations).
- VDE 0106 Part 101 (Basic Requirements for Protective Separation in Electrical Equipment).

The following is of special importance:

The motor ground must be connected with X5, pin 1.
The drive must be connected to ground via X7, pin 1 and X8, pin 1
If applicable, connect the housing of an external power dump resistor to GND via X6, pin 1.
When using a transformer, it has to comply with VDE 0550.
The minimum wire gauges of motor and mains cable should conform to VDE 0100.Please ensure an ample rating. When using long cables, wire gauges should be oversized.
The motor and resolver cables have to be shielded. Shield must be connected at the drive's end.
The resolver leads should be shielded and run as twisted pairs, if the cables are longer than 5 m.
The shield of the velocity command input cable should be connected to one end only, preferably on the drive's end.
The use of the isolated "drive ready" contact in a safety circuit increases the operating safety of the system.

Before clearing a fault by means of the reset input, eliminate the cause and make sure that giving this signal is not dangerous. (e.g.: if velocity command signal is still high, rapid movement could occur.)
When working on or in the vicinity of your machine, the power must be disconnected from the drive in accordance with VDE 0106, i.e. the supply voltage at X7 has to be disconnected. Disabling the drive is not safe enough to prevent motion under all conditions.
Always disconnect the main supply at X7 before disconnecting the auxiliary voltage. Switch on in reverse sequence. This is safer for your machine, but non-observance will do no harm to the drive.
The drive must be mounted in a vertical position.
Filtered air is required for cooling ($V_U \leq 40°C$).

WARNING: For emergency stop, disconnect the power supply. Removing the "Enable" signal is not safe in case of a drive fault.

3.2 Dimension Drawing

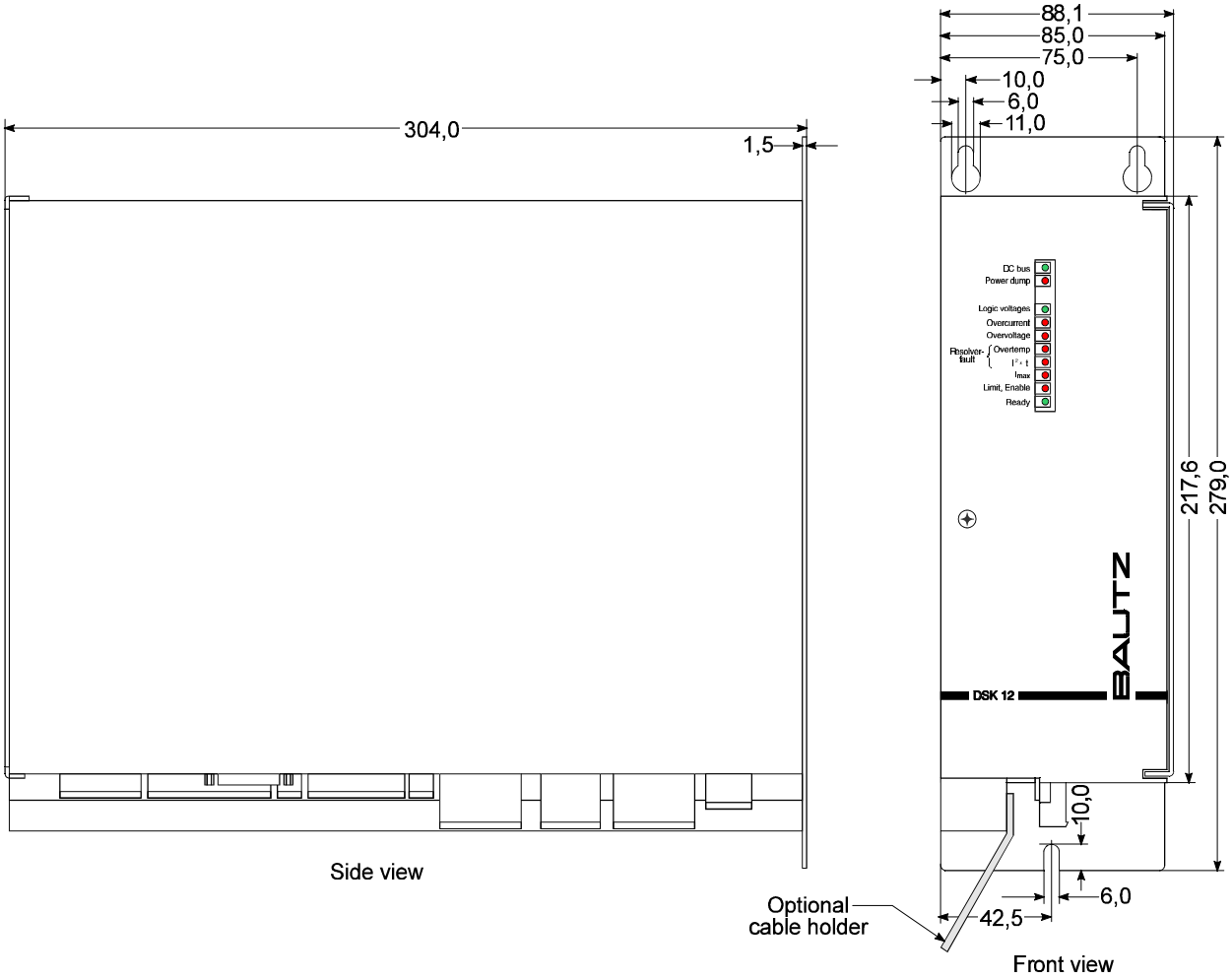

All Dimensions in mm
Subject to Change without notice

3.3 Mounting

3.3.1 Space Requirements, Cooling

You can tap M5 threads to the back panel of your cabinet according to the outline drawing on the next page.
Allow 150 mm of space under the drive for cabling and 50 mm of space above for air flow.
A cable holder to fit to the bottom of the drive is available as an accessory. Clamps on this cable holder provide stress relief and shield connection for all connected cables.

Order Code: DSK Cable Holder

If more than 2 kW of continuous power is required, the heat sink has to be ventilated from underneath. Position fan in a way that it blows directly at the heat sink. In order to avoid abrasive or conductive dust being blown into the drive, the cabinet's ventilation should be filtered.
When running the drive at full power, the ambient air must have less than 40°C.
Make sure the fan creates an air flow of about 3 m/s around the heat sink.

3.3.2 Drilling Diagram

Scale: 1:2 Marked with dotted line: Minimum clearance for air flow and cabling

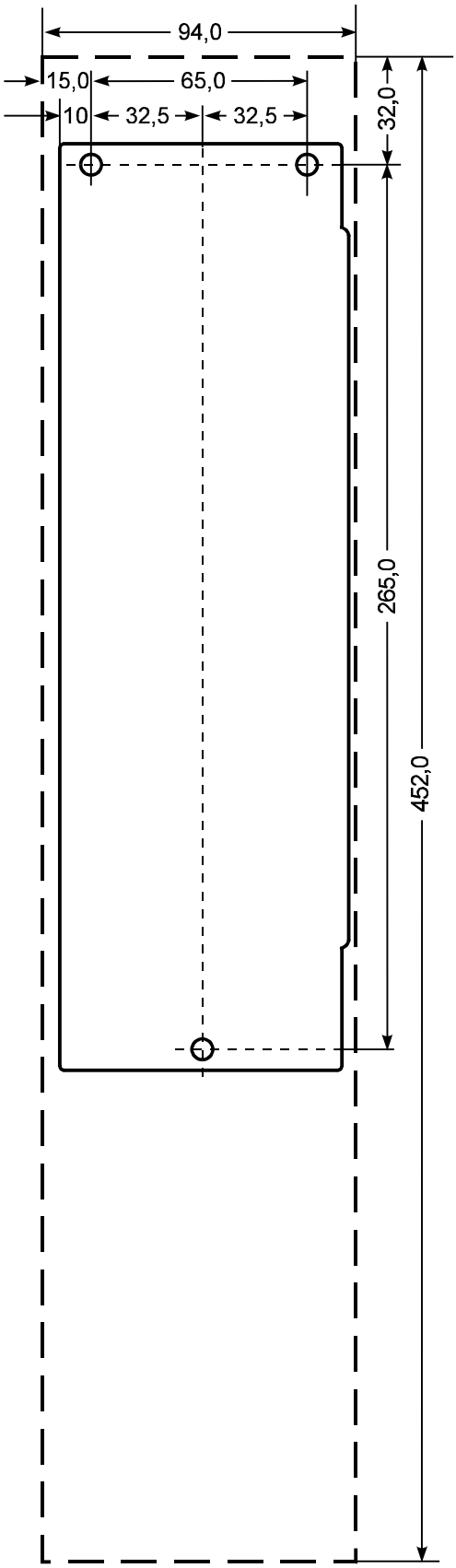

Drilling Diagram

3.4 Power Supply

3.4.1 Connection Diagram: Three-Phase Supply

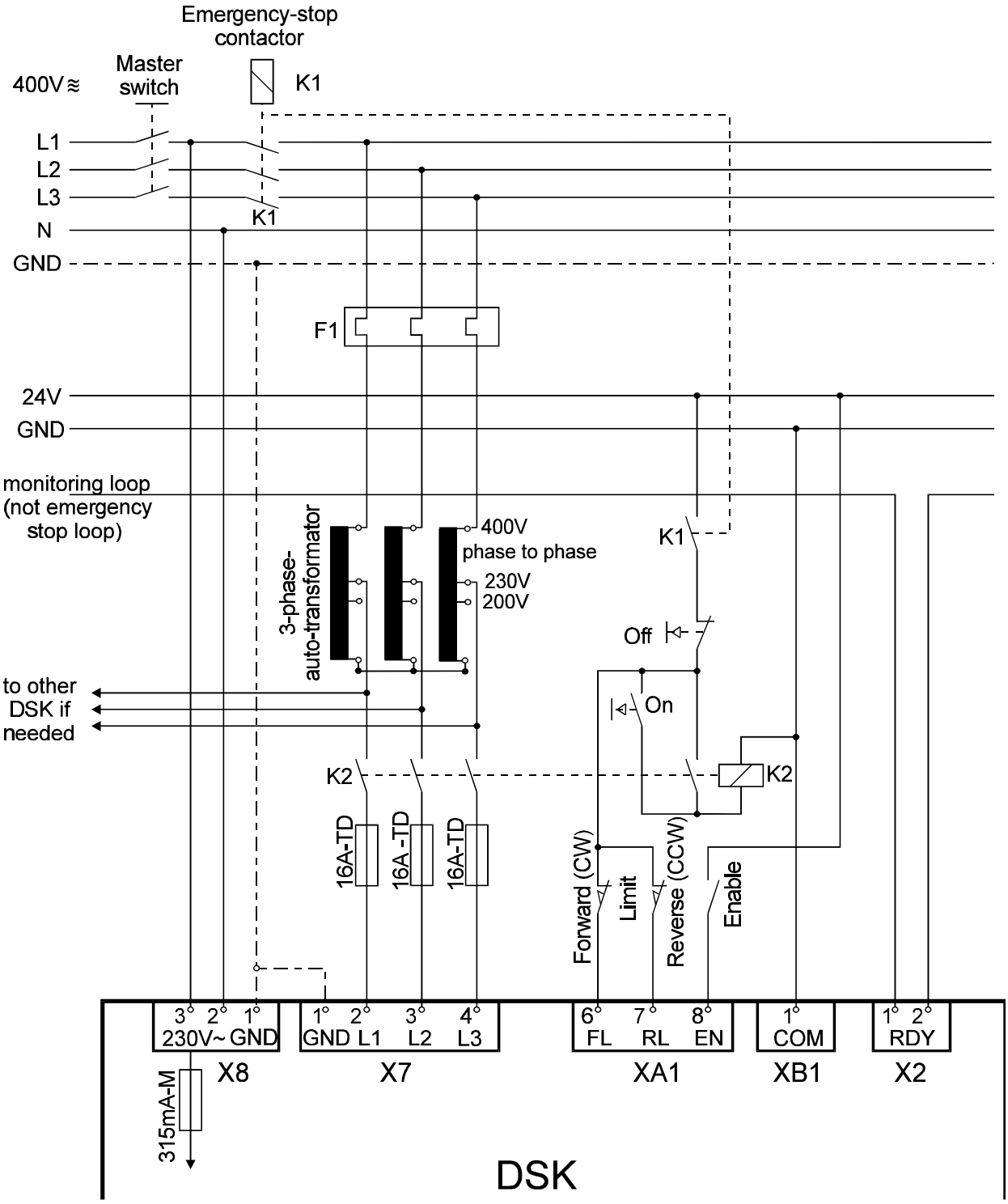

3.4.2 Connection Diagram: Single-Phase Supply

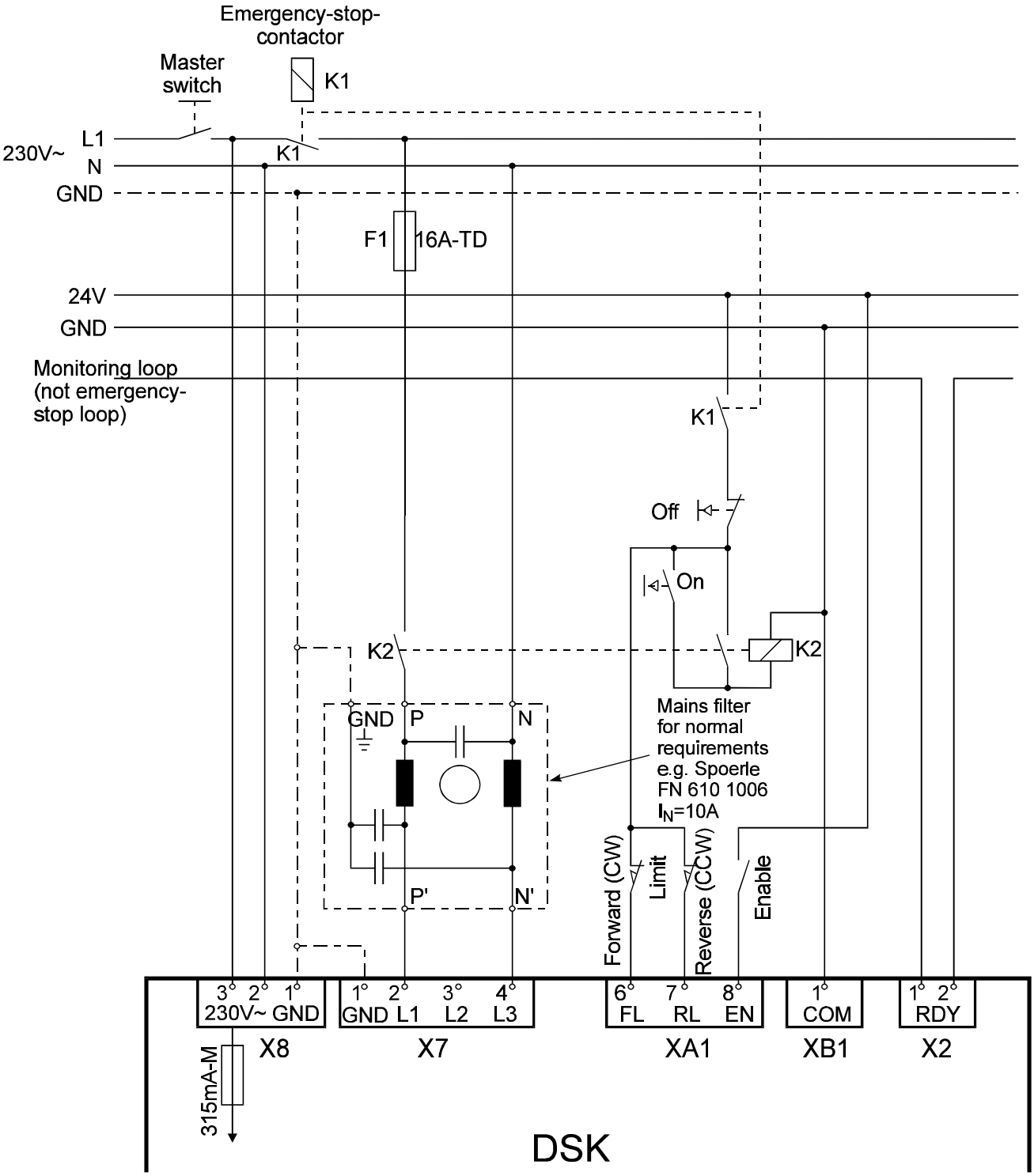

3.4.3 Supply Voltage

Single-phase supply from 230 V mains:
Connection to a 230 V single phase line is sufficient for a continuous power output of up to 1 kW. Line and neutral lead should be wired to connector X7, terminals L1 and L3. Ground connection should be made by a wire gauge of 2.5 mm^2 from the cabinet's central earth stud to X7, terminal 1.
Observe radioshielding regulations by using a mains filter of at least 10 A rated input current when operating without transformer. Position mains filter as close to the DSK drive as possible. This filter can be dispensed with if the complete system (e.g. control cabinet's supply) is radioshielded by the user.
Provide mains fuse rated 16 A slow-blow.

Three-phase supply from 400 V mains:
Use an auto-transformer for a power output of more than 1 kW. One transformer is sufficient for several DSK units. Rule of thumb for dimensioning:
Multiply the sum of the continuous power output of all motors by 1.2. If short load cycles are scheduled, contact us.
Transformer: Primary 3 × 400 V.
Secondary 3 × 230 V phase to phase, **not** phase to neutral.
Taps of + 5 %, – 5 % recommended
Transformer primary fuse has to be slow-blow. Secure each DSK individually by 16 A slow-blow fuses behind transformer's secondary winding. Use at least 1.5 mm^2 wire gauge from the transformer to the DSK 12 drive.
At emergency stop, mains supply must be disconnected from X7.
Watch for drive faults by wiring the ready relay contacts (ready = closed) on X2, terminal 1 and 2 into a monitoring loop.

WARNING: 400 V mains voltage on X7 will damage the drive!

WARNING: Wait 10 s before reconnecting after power-off.
Multiple immediate restart will damage the soft-start circuit.

The following transformer series are available:

Auto-transformer 3 × 400 V_{AC} / 3 × 230 V_{AC}

Types and Dimensions

Auto-Transformer	U_{prim} [V]	U_{sek} [V]	P_N 3) [kVA]	B [mm]	T [mm]	H [mm]	h [mm]	b [mm]	t [mm]	d for M
T0200	400	230	2	230	125	190	–	180	100	M6
T0300	400	230	3	230	148	200	15	180	122	M6
T0400	400	230	4	265	130	225	40–50	215	100	M8
T0600	400	230	6.3	300	155	270	40–50	240	120	M8

Tapping U_{sek} = 200 V available
3) when T_u = 45°C

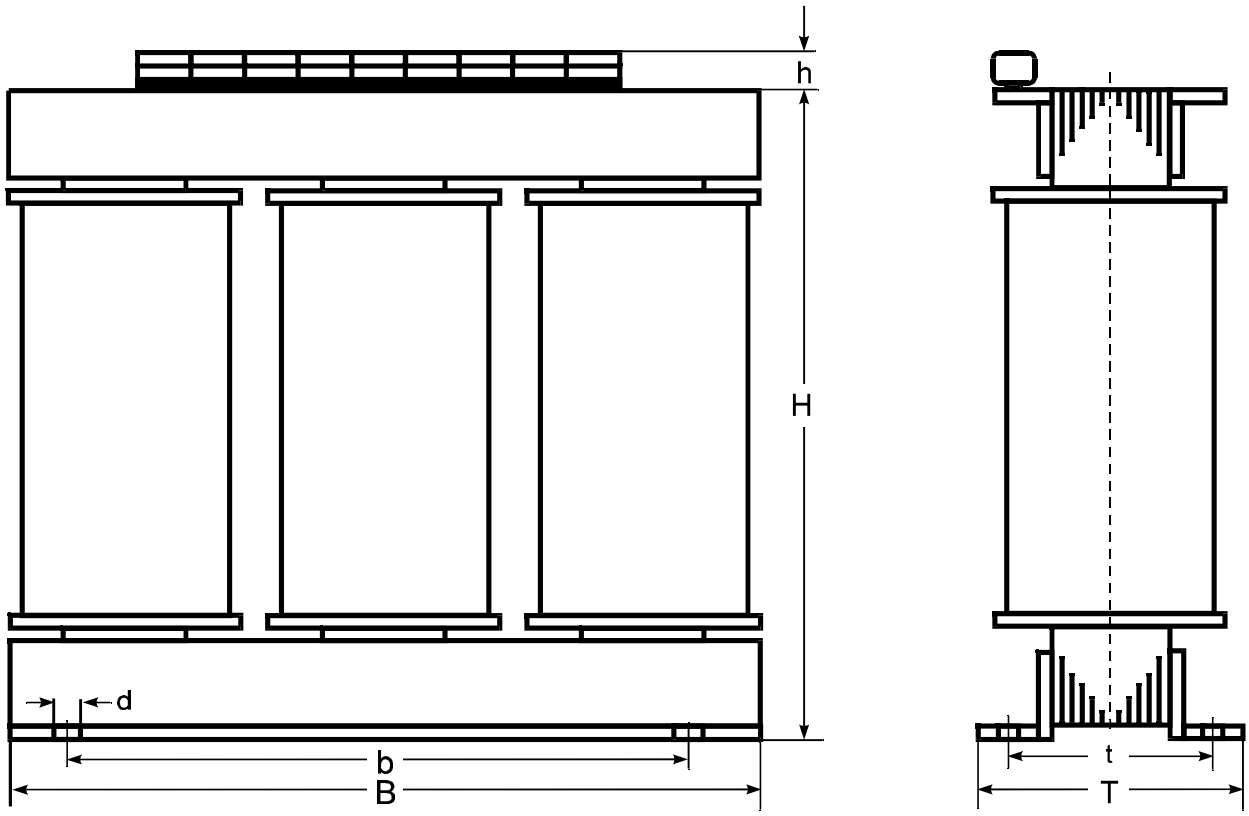

3.4.4 Auxiliary Voltage

The logic voltages are galvanically separated from the supply voltage of the motor and are fed by the auxiliary voltage input. This requires 230 V_{AC} on X8. If encoder and other outputs have to remain active, do not disconnect this voltage at emergency stop.
The drive does not work without auxiliary voltage.
A lack of the auxiliary voltage while the supply voltage is still on will do no harm to the drive, but this situation should be avoided.

3.5 Motor Connection

3.5.1 DSK Connection Plan

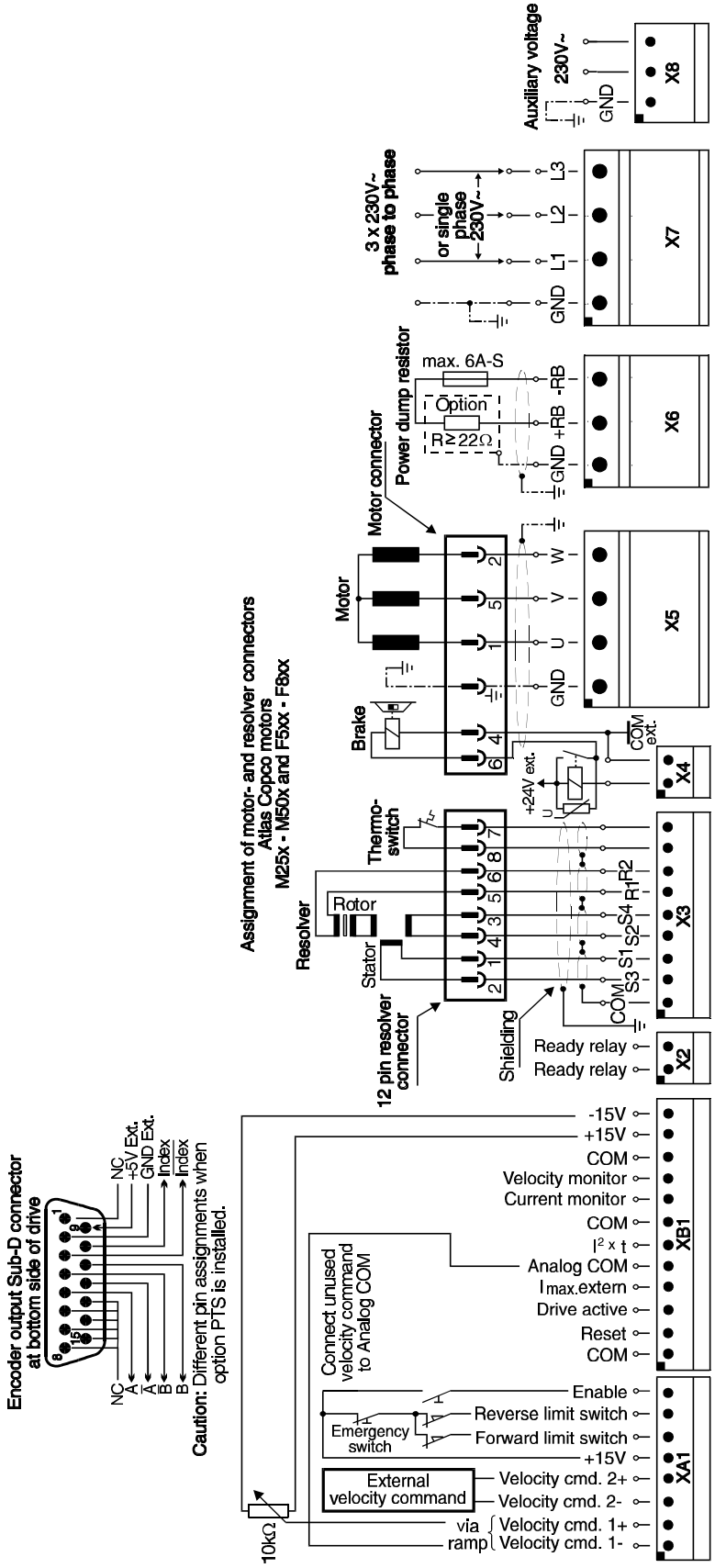

3.5.2 Motor Cable

A set of coupler plugs mating the motor and resolver sockets of BAUTZ motors are available: for motors from size M254 up to size M506, and for motor types F504 ,F634 and F804 order coupler set 57.346.
Shielded cables must be used for the motor leads. For cabling up to 20 m, 1.5 mm^2 a wire gauge is sufficient. Such cables can be ordered from BAUTZ. Order code: KAB-MO-B for motors with and without brake. Use 2.5 mm^2 for longer cables and full drive power. The two wires for an optional motor holding brake have to run within the motor cable. Manufacturers offer special cables for C track (cable chain) application.
Fix the ground wire at both, motor and drive connector, but fix the screen only at the drive's end to ground. Insulate screen at the motor's end to avoid ground loops. Using the optional cable holder, attach screen under the cable clamp, otherwise fix it at GND terminal. Long motor cables which have to run parallel to cables of very sensitive devices (like some inductive or capacitive sensors) should be separated from each other. Cables susceptible to interferences should better in parallel order with a minimum distance of 50 mm to the motor cables, even if screened.

The motor cable screen is normally fixed at the drive's end only in order to avoid ground loops. Brake leads inside a motor cable must have their separate shield.
In order to achieve a maximum radioshielding in the HF range it is however necessary to connect the screen on both sides. The screen can be connected to the housing of the mating coupler plug. In this case, the motor cable must not be interrupted by any connectors between amplifier and the motor, which would disturb the screen from wrapping up the wires.

3.5.3 Resolver Cable

A double-screened cable $4*2*0.25$ mm^2 with 4 pairs of wire, twisted and screened in pairs, wrapped in an isolated overall screen, should be used if the cables are longer than 5 m. When following these instructions, the cables can have a length of up to 100 m.
Such a cable is for example the Lapp Unitronic CY PICY, which can be obtained from BAUTZ under order code KAB-RES.
This cable is not suitable for C-track application. In a C-track application, divide the cable length in a double-screened cable part and a cable part inside the C track with twisted pairs screened in total.
Lately IGUS GmbH, D51127 Köln, Tel 02203-9649-0 has developed its Chainflex CF12 double screened cable especially for cable chains.
Attach wires to pairs as shown in the connection diagram on the previous page. Connect inner screens at drive's side only to COM, isolate them at motor's side. Connect the general screen to GND (insulated from the inner ones to COM), i.e. fix it under cable clamp of the optional cable holder, otherwise use M3 taped hole in heat sink between X5 and X7 for wiring screen to GND.
Usually all screens are connected to the drive's side only and insulated at the motor's side to avoid ground loops.
For maximum radioshielding in the HF range, insulate the internal screens at the motor's end, but fix the external screen to the coupler plug housing at the motors' side. This is possible with the new version of the coupler plug set. If you connect the screen here, the cable must not be interrupted by any other connector between drive and motor. They would interrupt the HF radioshielding.
The thermal switch of the motor has to be connected. Its wires run inside the resolver cable. The thermoswitch attached to the BAUTZ servo motors winding is normally closed, if the motor is cold. If you use other motors without thermal switch: Link the inputs.
Ask BAUTZ for ready-made motor and resolver cables.

3.5.4 Motor Holding Brake

BAUTZ servo motors can be ordered with a safety holding brake which opens actively at 24 V_{DC}. Do not connect the motor brake directly to the brake relay of the DSK. Brake coils have a high inductance. Therefore they tend to wear out their switch contacts. The DSK's brake relay max. rating is 24 V, 0.5 A. In order to have the possibility to change the switch element, an external relay or contactor must be used. Contacts of the external relay should be protected against inductive load using a varistor (e.g. Siemens S05K30 or RC elements) to prevent arcing.

3.6 Power Dump Resistor

When the motor generates energy while braking, this energy is partly converted into heat in the power dump resistors. The internal resistors can permanently dissipate a power of 50 W, and for a short period of time up to 500 W.
In applications requiring extensive braking power from the motor, use an additional external power dump resistor. Consider this particularly if the amplifier produces more than 1 kW output power, and is fed by a three-phase supply via transformer. Feel free to ask for our advice. In multiple-axis applications each DSK needs its own power dump resistor.
We offer such a power dump resistor in a shielding grid housing:

Order Code: **22RK**

Technical Data:

R = 22 Ω

Protection Class		IP20
$P_{cont.}$	at 300°C surface temperature	= 250 W
P_{peak}	during 1% of duty cycle and with a cycle period of 120s	= 6.9 kW

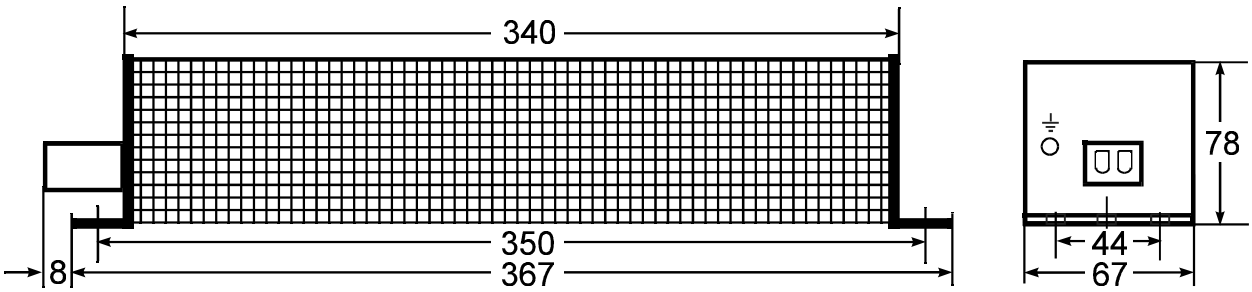

Connect external resistor to X6. Provide a 6 A slow-blow fuse in the circuit. Shielded cable 1.5 mm^2 should be used, because the shunt current is chopped with high frequency. Please wire screen to GND at X6, teminal 1. Remove hood and take out the drive´s internal power dump fuse, otherwise the internal and external resistors are in parallel, and the internal ones may overheat.

3.7 Signal Wiring

3.7.1 Velocity Command Signal Inputs

The DSK has two separated analog command signal inputs. Usually only one is used, the other one has to be shorted. A step command given to velocity command input 1 goes to an integrator circuit to generate ramps for both acceleration and deceleration. Use that input if for example a fix voltage is given to input 1.
Normally a position controller commands the drive. These positioners provide a velocity command signal in the range of ± 10 V and receive encoder signals as position message.

Connect such positioners to input 2, and short input 1+ with input 1– using a wire link. Velocity command input signals are sensitive to electrical noise. Keep cables as short as possible and do not lead them in parallel order to motor, supply, or power dump resistor cables. Connect screen to COM at drive end only to XB1-1 and insulate screen at positioner end. If a cable length of more than three meters is necessary, use a double-shielded cable with the external screen wired to GND in order to protect signals from noise. Interferences on the velocity input signals do not allow smooth running, increase the RMS motor current and the motor temperature.

3.7.2 Encoder Cable

WARNING: Please make sure that you do not have a drive with option card **PTS or PW3** installed. (Read label inside front door. For type code, cp. chapter 1.4). **In this case there is the danger of damaging circuits, because the 15-pole Submin D-socket has a different pin assignment!** Only standard DSKs and DSKs with option card ES3 give out 5 Volt TTL encoder signals. For standard pinout of that connector, cp. chapter 4.1: "Connector Pinout Survey". With option card PW3, cp. chapter 4.3.2. With a PTS, there is no encoder output.

For encoder signals use 4∗2∗0.14 mm^2 shielded cable with twisted pairs for A, B, index and 5 V supply. A thicker wire gauge is better for +5 V ext. and 0 V ext. wires, if the cable is long. Connect screen at positioner's end only, isolate it at drive's end. The encoder outputs are opto-isolated. The quasi encoder has to be supplied with 5 V_{ext}. like a hardware encoder.
WARNING: The external voltage must never exceed 5.5 V. Measure voltage before connecting!
With order code 57.203 BAUTZ offers a special encoder cable.

3.7.3 Enable and Limit Signals

The drive can operate only if the three inputs "forward limit switch", "reverse limit switch" and "enable" have a HIGH potential of 11 V_{DC} to 33 V_{DC}. Proposals for wiring are made in the diagrams 3.4.1 or 3.4.2. Provisionally, wire links to +15 V at XA1, terminal 5. Opening a limit switch produces active braking with current I_{max} . Opening the enable input interrupts motor current and leaves the motor coasting without torque. Internal common (COM) is the reference potential for these inputs. COM is connected internally to GND via a varistor. When connecting the enable and limit inputs to an external voltage (e.g. 24 V of the PLC), make sure its GND is connected to COM of the DSK drive, e.g. at XB1, terminal 1. The drive's logic voltages will then be connected galvanically to the PLC voltage.

3.7.4 Other Signals

All other signals are not essential for operation. They are described in chapter 4: "Functions" and chapter 5: "Set-Up Procedure".

WARNING: Do not switch on at this point!

When switching on for the first time, the motor must be decoupled from the load. Incorrect wiring may lead to uncontrollable running of the motor. Rapid acceleration can turn over motor housing, fix the motor. High currents could burn out small motors.

For safety "I_{max}" potentiomter could be turned down CCW.

Make sure to understand the functions of the amplifier (cp. chapter 4) prior to getting started. Adjustments should have been made according to chapter 5: "Set-Up Procedure".

4 Functions

The figure on the following page helps you in finding connectors and terminals.

This chapter describes all inputs and outputs, shows their interface circuits, and gives specifications when necessary. Because of shared features, the explanations are ordered by their types and not by terminal numbers. The table of contents may help to find a certain terminal’s explanation. Functions of switches, LED indicators, customer and resolver modules are described, too. The final part of this chapter informs about the option cards.

A sketch of all front panel controls and indicators with concise information can be found at the beginning of chapter 5: "Set-Up Procedure".

4.1 Connector Pinout Survey

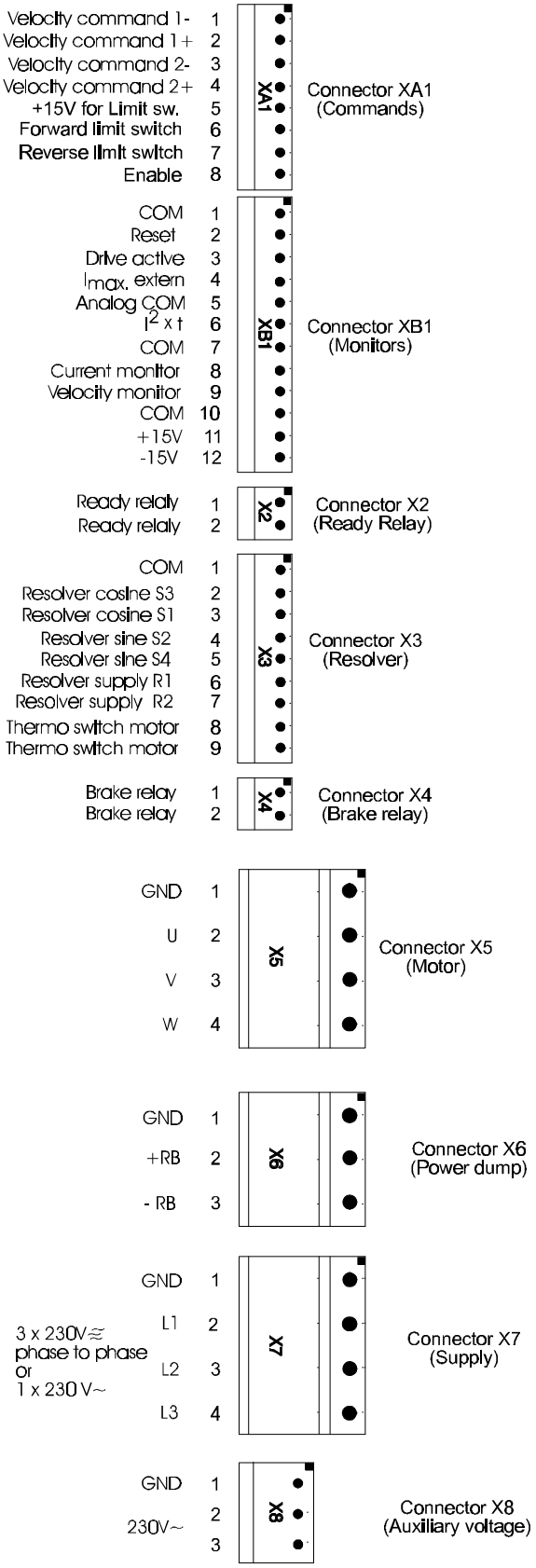

4.2 Encoder Output Sub-D Socket X9

at bottom side of drive
has different pin assignments when using add-on-boards:

a) Base Drive DSKxx-xx-000-Ax,
i.e.
Drive
without Extended Encoder Simulation ES3,
without Encoder Level Changer PW3 and
without Pulse Tracking Servo- Board PTS

b) DSKxx-xx-000-xx-PTS-D-xx-xx-xx
i.e.
Drive
without Extended Encoder Simulation ES3,
without Encoder Level Changer PW3 and
with Pulse Tracking Servo- Board PTS

c) DSKxx-xx-000-Ax-ES3,
i.e. Drive
with Extended Encoder Simulation ES3,
without Encoder Level Changer PW3 and
without Pulse Tracking Servo- Board PTS

d) DSKxx-xx-PW3-AA,
i.e. Drive
with Encoder Level Changer PW3
without Extended Encoder Simulation ES3,
without Pulse Tracking Servo- Board PTS

e) DSKxx-xx-PW3-AA-ES3,
i.e. Drive
with Extended Encoder Simulation ES3,
and with Encoder Level Changer PW3,
without Pulse Tracking Servo- Board PTS

	a) and b)	**c)**	**d)**	**e)**
Pin 1	n.c.	n.c.	+ 24 V ext. supply	+ 24 V ext. supply
Pin 2	GND ext.	GND ext.	GND ext.	GND ext.
Pin 3	$\overline{\text{Index}}$	$\overline{\text{Index}}$	$\overline{\text{Index}}$	$\overline{\text{Index}}$
Pin 4	A	B	A	B
Pin 5	B	$\overline{A}$	B	$\overline{A}$
Pin 6,7,8	n.c.	n.c.	n.c.	n.c.
Pin 9	+ 5 V ext. supply	+ 5 V ext. supply	n.c.	n.c.
Pin 10	Index	Index	Index	Index
Pin 11	$\overline{A}$	$\overline{B}$	$\overline{A}$	$\overline{B}$
Pin 12	$\overline{B}$	A	$\overline{B}$	A
Pin 13,14,15	n.c.	n.c.	n.c.	n.c.

Picture:

Soldering side of mating plug to X9
in cases a) and b):

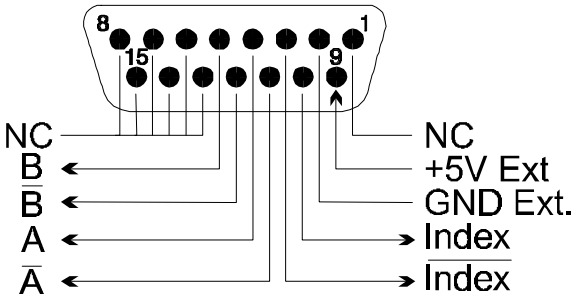

4.3 Functions of the DSK

4.3.1 Inputs

4.3.1.1 Analog Inputs

XA1-1 **Velocity Command Input 1 –**
XA1-2 **Velocity Command Input 1 +**

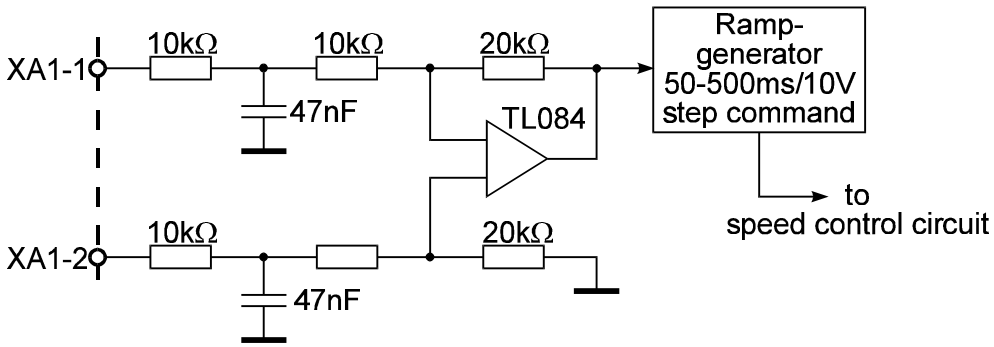

Figure 4.1 Input Diagram: Velocity Command Input

This is a differential input for a ±10 V analog velocity command signal.
It is lead via an adjustable ramp generator to the rotational speed control circuit. (see potentiometer "dn/dt" , chapter 5.5.7)
Velocity command signal 1 is used if only a fix voltage corresponding to a fix velocity will be switched to the drive; or if the velocity command signal comes from an external potentiometer. A positioner instead would be wired to velocity command signal input 2. Velocity command signals 1 and 2 may superimpose. Usually only one input pair is used at a time. The unused pair should be shorted by a wire link, because these signals are susceptible to noise.

XA1-3 **Velocity Command Signal 2–**
XA1-4 **Velocity Command Signal 2+**

Differential input for a ±10 V analog velocity command signal with principally the same input circuit as shown in the diagram above for velocity command signal 1+/1–, but leading the signal without ramp generator directly to the speed control circuit. This input is used to connect velocity command signals from a superior position controller.

XB1-4 **I_{max} external**
XB1-5 **Analog GND**

Analog input to limit the peak current I_{max} by an external device. This may e.g. be necessary if a screw is to be tightened at a certain torque. Then a superior control could command the torque at a sufficient insertion by connecting a resistor between I_{max} external and analog GND.

Alternatively an external voltage from 0 to +10 V_{DC} can be connected instead of a resistor.

WARNING: The voltage at XB1-4 must never be negative.

We recommend the following wiring:

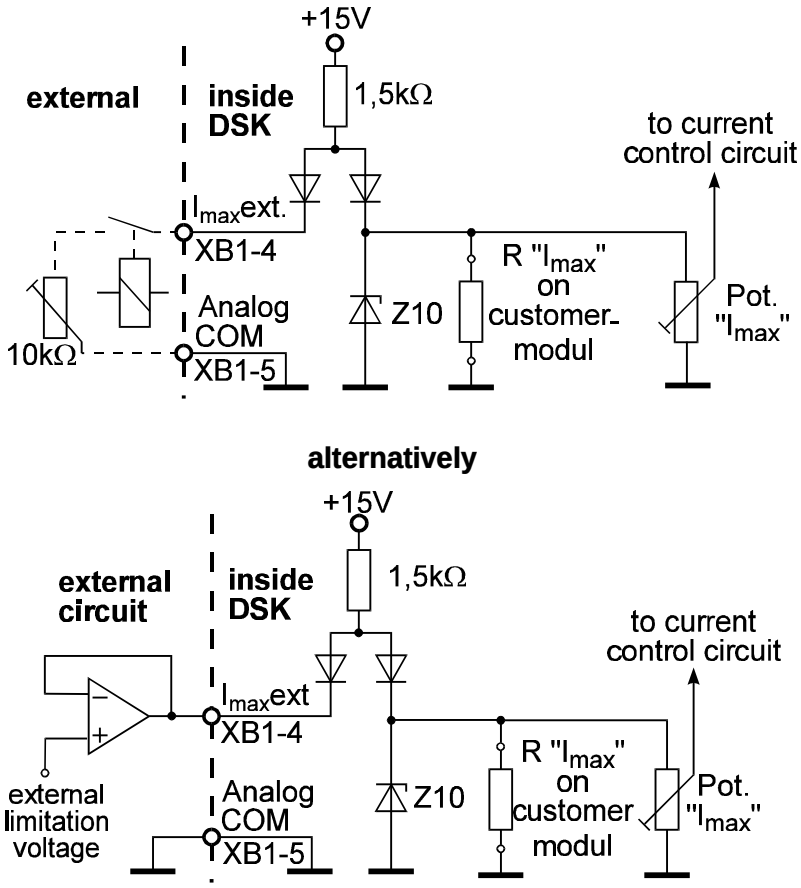

Note: The input XB1-4 must never be **negative**!

Figure 4.2: Input wiring I_{max} external

A limitation of I_{max} has priority before the I_{rms} setting, no matter what I_{max} is restricted by: by the input I_{max} external, or by the resistor I_{max} on the customer module, or by the potentiometer "I_{max} ". In other words: If I_{max} is set low, the motor current will be small, although the potentiometer "I_{rms}" may be set to a higher level.

WARNING: Do not use a cable of more than 10 m length for wiring input I_{max} external. Use shielded cable. If the controller is further away, install a relay with gold-plated contacts near the DSK. Gold plated contacts are necessary because a current of only 10 mA flows.

4.3.1.2 Digital Inputs

XA1-6 Forward limit switch
XA1-7 Reverse limit switch
XA1-8 Enable input

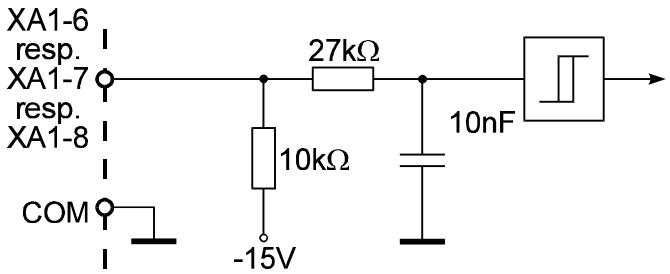

Figure 4.3 Limit and Enable Input Circuits

These are PLC compatible inputs suitable for voltages from 11 to 33 V_{DC}. "High" refers to COM of the drive. COM can be taken from connector XB1, Terminal1 and has to be connected with 0 V of an external voltage. As COM is connected to (Earth) Ground via a varistor inside the drive, you hereby make a galvanic connection between 0 V of the external voltage and the logic voltages of the DSK.

To prevent COM track from burning off in case of an earth fault of the external voltage, please ground external 0 V additionally.

"High" must be given to all three inputs in order to control motor rotation in both directions. Alternatively set the inputs "High" by linking them to the drive's internal +15 V, available at XA1, Terminal 5.

Opening the enable input will disable the amplifier, will lead to coasting of the motor. Simultaneously the contacts of the brake relay will open.

WARNING: Opening the enable input in case of an emgergency stop situation is not recommended. It neither stops the motor actively nor guarantees a secure electric separation of a possibly faulty drive. (cp. chapter 3.4.1: "Connection Diagram: Three-Phase Suppy").

While the motor is turning in a certain direction, the opening of a limit switch triggers active braking of the motor with the current I_{max}, the value of which depends on the setting of I_{max}. When using velocity command input 1, the ramp adjusted on potentiometer dn/dt will not be effective.
If the speed is slower than approx. ± 100 min^{-1}, the contact of the brake relay opens. The amplifier disables approx. 40–50 ms after the brake relay opens. In an emergency stop situation the supply voltage – not the auxiliary voltage – may be disconnected, and at the same time both limit switches can be opened. The motor will brake actively in spite of the lacking drive supply voltage, because the drive is fed by regenerative energy.

Direction of Rotation:

A positive voltage at velocity command input 1+ (resp. 2+) with reference to 1– (resp. 2–) causes a CW rotation of the motor, i.e. the shaft turns clockwise when looking at the flange. The forward limit switch will stop CW rotation.

Function Diagram for Different Inputs and Outputs

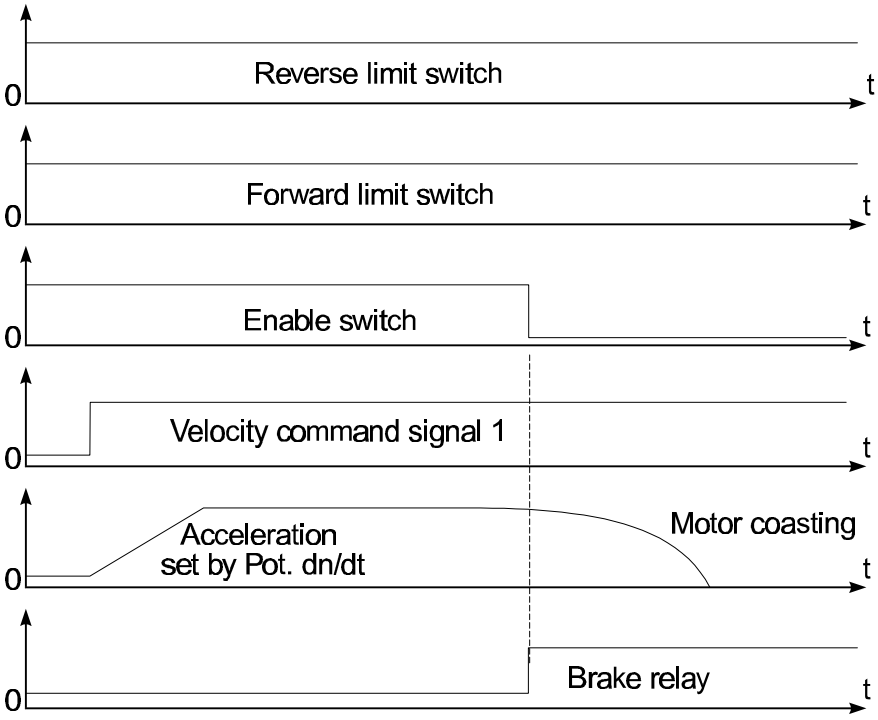

Figure 4.4

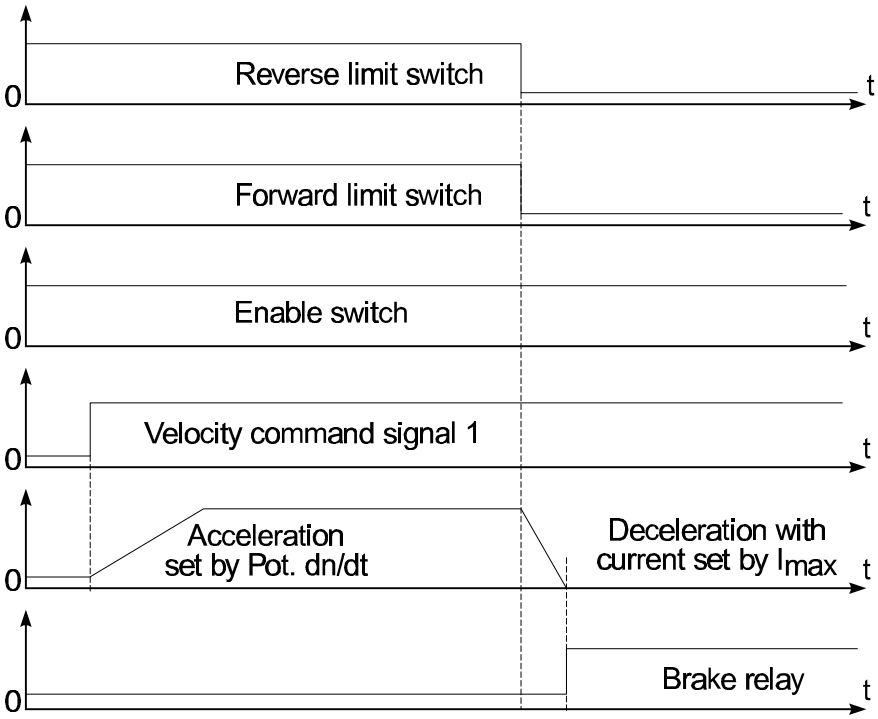

Figure 4.5

XB1-2 Reset Input

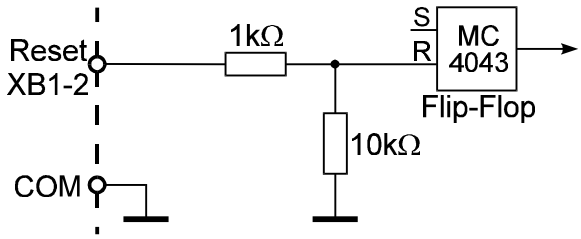

Figure 4.6 Input Diagram "Reset"

If a drive fault occurs it will be stored and displayed by a LED. If the "$I^2 \times t$" peak current limitation is restricted the I_{max} current to I_{RMS} temporarily even only once, it will also be stored and displayed by the LED "$I^2 \times t$". To reset the drive and its displays, disconnect the auxiliary voltage supply, or set the reset input "high" for min. 1 ms to max. 10 ms. This input accepts external voltages from 11 to 33 V_{DC} for a short time. Reference potential is COM. Alternatively, +15 V can be taken from connector XA1, terminal 5.

WARNING: **Never** apply voltages higher than 15 V for **longer than 10 ms**. If the drive has disabled due to a fault condition, make sure the velocity command signal is small before resetting the drive, in order to **avoid motor runaway. Correct the reason for the fault before resetting**, e.g. let motor or DSK cool down.

4.3.2 Output Functions

4.3.2.1 Analog Outputs

There are two analog outputs, one for the speed (tacho) monitor, one for the current monitor. Both can be taken either from the terminals at the bottom, or from the test jacks behind the front door. The reference potential is Analog COM of the DSK. Shielded cable is to be used if the outputs are wired to an external device. A current of less than 100 µA should be drawn, therefore the input resistance of an external measuring instrument should exceed 47 kΩ.

XB1-8 Motor Current Monitor (I Monitor)

This signal exists at the test jack behind the front door, too.

Evaluation: 1 V equals 20 % of the rated continuous RMS motor current of the DSK:

1 V monitor voltage equals 1.76 A_{RMS}
1 A_{RMS} equals 0.57 V monitor voltage

The monitor voltage is:

positive when motor rotates clockwise
negative when motor rotates clockwise as generator (motor is braking)
positive when motor rotates counter clockwise as generator
negative when motor rotates counter clockwise as motor.

The voltage level of the current monitor is not identical with the AC current in a certain motor winding. In fact it corresponds to the drive's internal torque command signal.
Calculate like with a DC Motor: $M = k_T * I$, i.e. Motor torque M equals k_T (motor torque constant) times I (derived from the current monitor).

Example: M406D: $k_T = 0.35$ Nm/A
The motor rotates a load with unknown torque at 4500 min^{-1} constantly.
Signal: I Monitor = 4 V
$I_{Motor} = 4\ V \times 8.8\ A/5\ V = 7.0\ A$
$M_{Motor} = 7.0\ A \times 0.35\ Nm/A = 2.5\ Nm$
The diagram in our motor catalogue shows that the motor can only produce a continuous torque of 2Nm at 4500 min^{-1}. The motor would overheat on the long run.

XB1-9 Velocity (Tacho) Monitor (n Monitor)

The signal will also be given to the pin "n monitor" behind the front door.

1.5 V equals 1000 min^{-1}

The monitor voltage is positive if the motor turns CW, it is negative when it turns CCW, always referring to Analog COM of DSK.

4.3.2.2 Digital Outputs

XB1-3 Drive Active

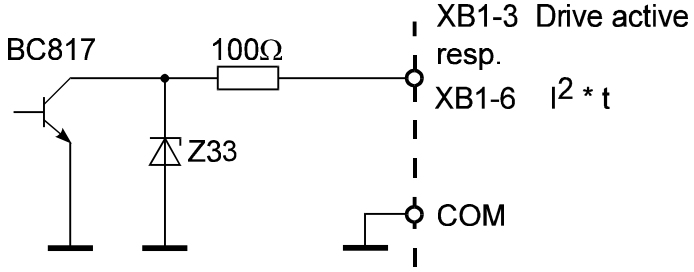

Figure 4.7 Outputs "Drive active" and "$I^2 \times t$"

Transistor Output, Open Collector Circuit,
Load max. 24 V, 20 mA
Reference potential: COM of DSK

Output transistor switches to COM, if motor control is active. This happens when all three inputs for forward limit switch, reverse limit switch and enable are set "high" <u>and additionally</u> the conditions for closing "drive ready" relay output are given, i.e. supply and auxiliary voltages applied, DC Bus voltage is okay, no fault detected.

XB1-6 $I^2 \times t$ Limitation

Transistor Output, Open Collector Circuit
Load + 24 V, 20 mA
Reference potential COM of DSK
Output is similar to "Drive active", see above diagram.

During acceleration, deceleration or with high torque demand, the drive can, for a short period of time, produce a peak current I_{max}, which can be higher than the current allowed to flow continously, I_{rms}.
A load cycle's current is measured and evaluated with $I^2 \times t$. If currents higher than I_{rms} are demanded too long or too often, peak currents will no longer be allowed, but be limited to I_{rms}, in order to avoid overloading the motor. The higher the difference between I_{max} and I_{rms}, the sooner the $I^2 \times t$ limitation will become effective.This limitation will increase acceleration or deceleration times, or the commanded speed cannot be reached. This could cause time delay problems in the cycles of your machine. Therefore, the situation will be monitored and displayed. $I^2 \times t$ signal is an overcharge information, not a drive fault.

If $I_{max} = 2 \times I_{rms}$, the peak current can flow for approx. 500 ms.
If I_{max} is set lower than I_{rms}, the I_{max} setting overrides I_{rms} and $I^2 \times t$ will never come.

The transistor output switches to "low", while $I^2 \times t$ limitation is active. If torque demand decreases, peak currents are allowed again after recovering. Transistor output opens then.

Contrarily, for the LED "$I^2 \times t$" on the front panel the event will be stored, the LED stays illuminated. This shows that since the last reset or start, the $I^2 \times t$ limitation was active at least once. The $I^2 \times t$ LED can be cleared by a reset.

X2-1 **Relay Output "Drive Ready" (Ready)**
X2-2

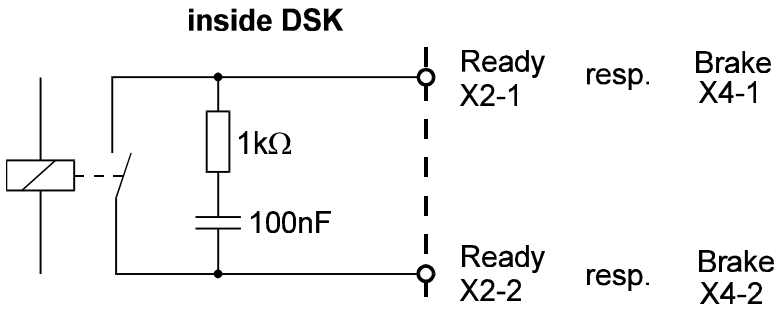

Figure 4.8Relay Output "Drive Ready" and
Relay Output "Brake"

Relay, normally open, max. non-inductive load: 24 V_{DC} – 0.5 A

The output closes when:

a) the auxiliary voltage is applied
b) approx. 1 s after applying supply voltage the DC bus voltage is built up
c) no fault is detected

The output opens if the auxiliary supply or main voltage supply is disconnected. It also opens when a fault is detected by the drive, which will be indicated by red LEDs on the front panel. (Remember that the red $I^2 \times t$ LED does not indicate a drive fault, but a drive overcharge, the drive will stay ready with the $I^2 \times t$ LED illuminated.)

If the "Drive ready" relay opens, the drive will be disabled, the motor will coast, and the brake relay will open.

Compare: $I^2 \times t$ Message (see above), Reset Input (chapter 4.2.1.2).

The contacts of the Ready relay should be wired into a monitor loop to increase the safety of your machine.

The drive may give the signal "ready" although it is not active due to an open enable or limit switch. In this case the transistor output XB1-3 "Drive active" is open.

X4-1 Relay Output: Motor Holding Brake
X4-2

Relay Output, normally open, max. non-inductive load 24 V_{DC} – 0.5 A
Output diagram similar to output "Drive Ready", see above.

Do not use for direct connection of the motor brake!

An auxiliary contactor or relay has to be inserted, because of arcing due to the high inductance of the brake coil would wear the contacts too quickly, and because an external contactor is easy to change. Protect its contacts by a varistor.
Please cp. chapter 3.5.1: "DSK Connection Plan" and 3.5.4: "Motor Holding Brake".

The brake relay closes if the following conditions are fulfilled:
- Auxiliary voltage supply applied
- Supply voltage applied
- Drive enabled
- Directional limit switch inputs "high".

Please refer to chapter 4.2.1.2: "Digital Inputs" to find out under which conditions the brake relay opens. You will find two explaining diagrams there, too.

WARNING: A drive fault is like opening the disable input: The motor will not brake actively, but coast without torque. The brake relay will open, and an optional holding brake would stop the motor, although holding brakes are not made for this. A motor without brake would coast. If an axis could run towards end-of-travel with high speed, or the vertical axis could fall down, think of opening the motor cable and switching resistors between the motor phases in order to brake, or to prevent a vertical axis from falling down quickly.

4.3.3 Auxiliary Voltage Outputs

The drive's internal logic voltages are fed by the auxiliary voltage supply. These logic voltages are led outside via protective resistors to the following terminals:

XA1-5 Auxiliary Voltage +15 V

Only destined for setting enable, forward and reverse limit "high".
Max. load: 8 mA
Protecting resistor inside DSK: 100 Ω , 1/8 Watt

XB1-11 Auxiliary Voltage + 15 V
XB1-12 Auxiliary Voltage – 15 V

Only destined for connecting an external 10 kΩ potentiometer in order to have a velocity command signal provisionally.
Max. load: 10 mA
Protecting resistors inside DSK: 33 Ω, 1/8 Watt.
These outputs are not suitable to supply external electronics.

XB1-1 COM (Common)
XB1-7
XB1-10

This is the 0 Volt potential of the internal logic voltages. It is connected with earth ground GND not directly, but via an 8 V varistor internally. The power electronics and the drive's DC bus are galvanically separated from the logic voltages. COM is reference potential for all inputs and outputs.

Exceptions: Relay outputs "Brake" and "Ready for Operation" have potential-free contactors.

For the analog outputs n Monitor, I Monitor and the input I_{max} external "Analog COM" should be used.

XB1-5 Analog COM

This terminal is galvanically identical with COM. But the PCB tracks of the analog control circuits are layed out carefully with respect to minimal electrical noise susceptibility. Therefore, analog COM is brought outside only as referene potential for the two monitor outputs n Monitor, I Monitor and the analog input "I_{max} external". The test jack "COM" behind the front door is also "Analog COM", but here a protective resistor of 100 Ω is placed before the test jack.

To prevent interferences, Analog GND on XB1-5 should not be connected with an external position controller, with a PLC, or with earth ground GND or any 0 V external.

4.3.4 LED Indicators

Further information about LEDs, potentiometers, customer and resolver modules can be found in chapter 5: "Set-Up Procedure".

LED "DC Bus " (green):
Illuminates when the supply voltage is applied at X7, i.e. the DC bus voltage is built up.

LED "Power dump" (red):
If the power dump circuit is activated due to excessive DC bus voltage, it switches current pulses to the power dump resistors (cp. chapter 3.6), thus illuminating the LED. The power dump circuit will be active discharging the DC bus capacitors even if the supply voltage was disconnected from X7.

LED "Auxiliary Voltages" (green):
The auxiliary voltage on X8 is applied and the internal logic voltages are ready.

LED "Overcurrent" (red):
Indicates a short circuit in the motor or its cable. The drive will be disabled, the "Drive ready" relay opens.

LED "Overvoltage" (red):
The DC bus voltage has exceeded 400 V. The drive will be disabled, the "Drive ready" relay opens.

LED "Overtemperature" (red):
The DSK or the motor has exceeded its temperature limit, or the resolver cable is not connected, thus opening the thermo switch circuit. The drive will be disabled, the "Drive ready" relay opens.

LED "$I^2 \times t$" (red):
Indicates that the $I^2 \times t$ limitation was active at least once since the last reset or power-up. The LED stores this information, contrary to the corresponding $I^2 \times t$ output on XB1-6 (cp. chapter 4.2.2.2: "Digital Outputs"). This is a drive overcharge condition, not a fault. The drive remains ready.

Resolver fault: LED "$I^2 \times t$" and LED "Overtemperature" are illuminated at the same time:
If LEDs "overtemperature" and "$I^2 \times t$" are illuminated simultaneously, this is caused by a faulty resolver connection. One or more resolver leads are broken or cross-connected.

LED "I_{max}" (red):
This LED is illluminated while the drive's adjusted peak motor current I_{max} is demanded . If I_{max} was set correctly before, this LED can be used as setup aid during positioner setup. Please set positioner's acceleration / deceleration ramps to a value so that the drive's I_{max} limit is not yet reached.

LED "Limit switch / Enable" – "LIM" (red):
This LED is illuminated if "high" potential at the enable input or any of the two limit switch inputs are missing, e.g. if the connection is open. The drive is disabled, or disabled after an active motor stop, respectively.

LED "Drive ready" – "READY" (green):
Is illuminated as long as the ready relay's contacts are closed. Compare chapter 4.2.2.2, Relay output "Drive ready".

4.3.5 Test Jacks "I Monitor", "n Monitor" and "Analog GND"

These three test pins are provided to connect an oscilloscope or a voltmeter during drive set-up.
(Cp. chapter 4.2.2.1: "Analog Outputs")

4.3.6 Resolver Module

Factory settings are printed on the panel behind the front door. Changes of the elements are not necessary, when BAUTZ servomotors of the M and F series are used.
Exceptions: Cp. chapter 5.5.1 and 4.3.1 and 5.5.3.2.

4.3.7 Potentiometers

For detailed information about the potentiometers, compare chapter 5: "Set-Up Procedure".
From top to bottom you find:

dn/dt	Acceleration / deceleration ramp for velocity control signal 1. Factory setting: CW, less steep
Vel	Velocity (tacho) feedback rating. Factory setting: CCW, less attenuated.
Vel_{com}	Velocity command signal magnitude rating. Factory setting: CW, not attenuated.
Offset adjustment.	Factory setting: about midrange position, 0 Volt velocity command signal = motor standstill.
Gain	Velocity control circuit feedback, proportional and integral gain. Factory setting: CCW, overdamped system response.
I_{rms}	Sets motor current allowed to flow continuously. Factory setting: CW – maximum
I_{max}	Sets peak motor current allowed for short times, when high torque is demanded. Factory setting: CW – maximum.

4.3.8 DIP Switch: Number of Motor Pole Pairs

All BAUTZ servo motors of the M and F series have 3 pole pairs. Set switch 1 and 2 in "off" position.
Please contact us when using other servo motors.

4.3.9 Customer Module

The factory settings are printed on the panel behind the front door. Resistors can be changed to reduce the adjustment range of the potentiometers Vel_{com} , I_{rms} and I_{max} . Another resistor and a capacitor set the values for the P and I portion of the velocity control circuit gain. (For details, cp. chapter 5: "Set-Up Procedure").

4.4 Option Cards

The label inside the front door shows the type of the drive. (For type designation, cp. chapter 1.4: "Order Code".) Thus you can see if any option cards are installed ex factory. If you add such a board yourself, please change the label accordingly.

4.4.1 Extended Encoder Simulation ES3

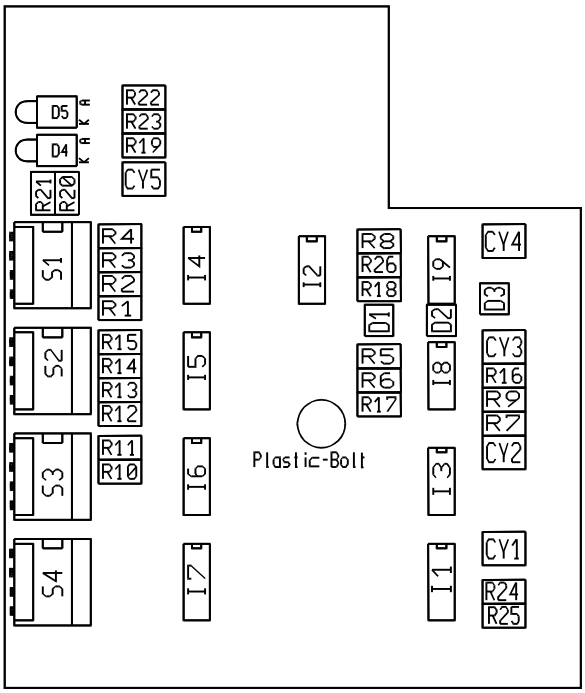

Figure 4.9 Option card ES3

To be identified on the assembly side: BAUTZ-DSKOP-nn

The DSK standard drive has an encoder output which can be handled like a 1,024 line encoder. The index or marker pulse refers to a given position of the motor shaft. This index position cannot be changed. But in some cases this is not suitable, e.g. if the index pulse is needed for a homing procedure. In other applications different line counts may be needed.
The enhanced encoder simulation offers:

- an adjustable index pulse with reference to the motor shaft and
- a choice between quasi-encoders with 256, 512, 1024 or 2048 lines/rev.

If 2048 lines/revolution are required, the resolver module has to be changed. Please contact us about that. No resolver module changes are necessary for 256, 512, or 1024 lines/revolution.

– Mounting:
  - Loosen casing with 9 screws.
  - Loosen ribbon cable from PCB board.
  - Please observe the usual safety requirements for electro-static sensitive devices.
  - Fix the plastic bolt to the ES3 board with M3 screw from below.
  - Fix board to dual-in-line pins of the DSK in a way that ES3 front edge is parallel to DSK front edge. The ES3 board should cover the DSK board from the LED "Auxiliary Voltages" to the potentiometer dn/dt.
  - Connect ribbon cable.
  - Change label inside front door according to type designation (cp. chapter 1.4).
  - Fix casing again.

Line count setting:

On the ES3 board, the four DIP switches S1 to S4, each one having four single switches 1 to 4, are numbered from top to bottom.
S4-3 and S4-4 are responsible for the adjustment of the line counts:

Line count	S 4-3	S 4-4
256	0	0
512	1	0
1024	0	1
2048*	1	1

* possible only with a 14 bit resolution of the resolver-to-digital converter. Therefore, changes on the resolver module are necessary. Please contact BAUTZ for assistance.

Adjusting the index (marker) position by the switches:

line count setting:		(2048) (not yet switch available)	1024	512	256
MSB (most significant bit):	S1-1	2^{12}	2^{11}	2^{10}	2^{9}
	S1-2	2^{11}	2^{10}	2^{9}	2^{8}
	S1-3	2^{10}	2^{9}	2^{8}	2^{7}
	S1-4	2^{9}	2^{8}	2^{7}	2^{6}
	S2-1	2^{8}	2^{7}	2^{6}	2^{5}
	S2-2	2^{7}	2^{6}	2^{5}	2^{4}
	S2-3	2^{6}	2^{5}	2^{4}	2^{3}
	S2-4	2^{5}	2^{4}	2^{3}	2^{2}
	S3-1	2^{4}	2^{3}	2^{2}	2^{1}
	S3-2	2^{3}	2^{2}	2^{1}	2^{0}
	S3-3	2^{2}	2^{1}	2^{0}	/
	S3-4	2^{1}	2^{0}	/	/
LSB (least significant bit):	S4-1	2^{0}	/	/	/

1. Switch on Control Voltage at X8. Keep Supply voltage at X7 switched off.
2. Place shaft to the desired marker position.
3. Turn off DIP- Switches S1/1, S1/2, ... S4/1. LED “D4” should be lit now.
4. Start with MSB-Switch S1/1.
5. Place from MSB downwards the DIP-Switches in ON position, until LED “D4” gets dark.
6. If “D4” is dark, but “D5” lit, switch back the last switch you turned.D4 lits again- and get on with the next lower switch Go to point 5.)
7. If wether D4 nor D5 is lit, the marker is placed exactly to the actual motor shaft position

When a motor was exchanged, another setting might become necessary.
Switch S4-2 has no function.
The quasi-encoder’s pulses are wired by a ribbon cable to the submin-D-connector at the bottom of the DSK casing. Standard pinout as shown in chapters 3.5.1 and 4.1.
The encoder outputs are opto-electronically separated from the drive’s logic. External 5 V **(never more than 5.5 V)** have to be supplied like to a hardware encoder.
Most external position controllers quadruple a 1024 line encoder output to 4096 positions/rev. by counting each slope.

4.4.2 Encoder Level Changer PW3 for 24 V_{DC} Encoder Output Signals

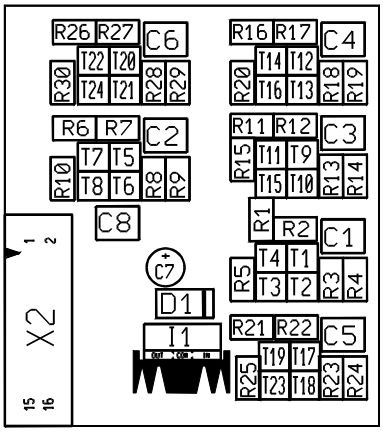

Figure 4.10 Option card PW3

Identification on the assembly side: BAUTZ-DSKEP-nn

If the input circuits of the external positioning control require encoder signals on 24 V level, the option card PW3 can be used.
It may be used together with the option card ES3 (Adjustable index, different line counts)
The PW3 board is limited to a max. output frequency of 120 kHz. Normally, this is no limitation to the maximum motor speed with a standard 1024 lines/rev. setting.

WARNING: When using the PW3 together with ES3, the latter set to 2048 lines/rev., only a speed of approx. 3000 min^{-1} can be reached. Please program a suitable following error limit for the position controller. When exceeding this limit, a quick motor stop can be achieved by opening both limit switches of the DSK.

Mounting: Similar to that of ES3 option card.
The card is put into the dual-in-line connector of the disconnected ribbon cable and is fixed with a M3 screw at the bolt on the DSK board.
Reconnect ribbon cable to connector on PW3 board. Change the label inside the front door according to type designation in chapter 1.4.

The encoder outputs of the PW3 option card are opto-electronically separated from the drive's logic voltages. External 24 V supply is therefore necessary. Please regard the slightly different pin assignment of the submin-D-connector in comparison to the standard pin assignment. Both connectors are shown in chapter 4.1 "Connector Pinout Survey".

Connect + 24 V supply at pin 1.

Pin 9 (normally +5 V supply) must not be connected!

Pin 2 (GND ext.) remains GND for the external 24 V supply.

All output pins have the same function as on the standard drive, but offer active signals on a 24 V level:

Pin 1:	+ 24 V external supply
Pin 2:	GND of ext. supply
Pin 3:	$\overline{\text{Index}}$
Pin 4:	$\overline{\text{B}}$
Pin 5:	A
Pin 6:	n.c.
Pin 7:	n.c.
Pin 8:	n.c.
Pin 9:	DO NOT CONNECT!
Pin 10:	Index
Pin 11:	B
Pin 12:	$\overline{\text{A}}$
Pin 13:	n.c.
Pin 14:	n.c.
Pin 15:	n.c.

4.4.3 PTS – Option Card for Different Position Control Modes

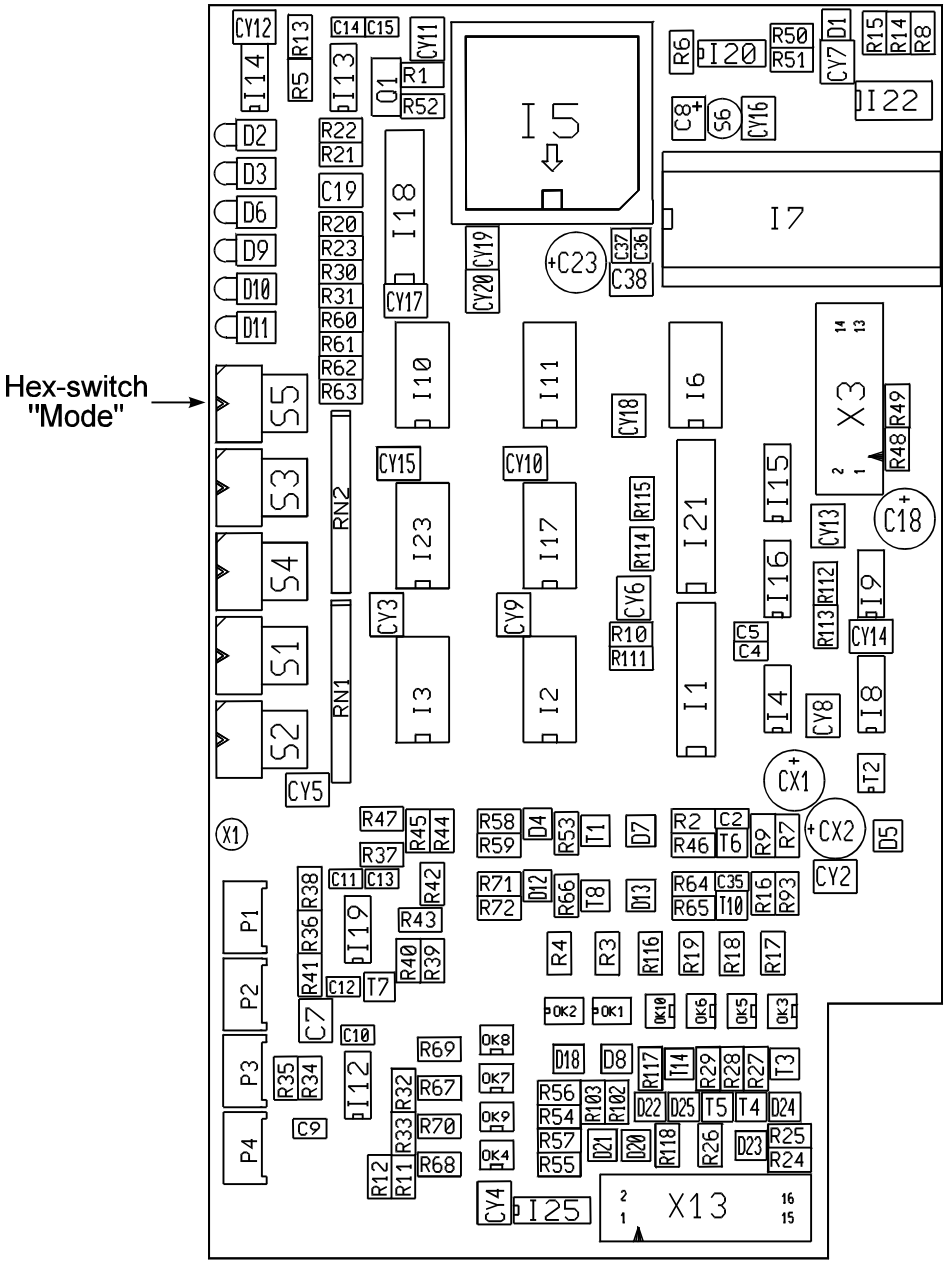

Figure 4.11 Option card PTS

Identification on the assembly side: BAUTZ-DSKPT-nn

The PTS option card is a digital position controller. With little changes to the hardware, different kinds of motor positioning can be performed. In general three types of software are available making the PTS either:

PTS-T: **P**ulse **T**racking **S**ervo with clock and direction input.

The complete unit, consisting of PTS-T position controller, DSK Drive and AC servo motor, can be used like a stepper motor drive, which can never miss steps and which can accelerate with maximum torque.

PTS-E: **Pulse Tracking Servo with Encoder**

In general the same like above, but with an encoder input. This is a solution for master-slave applications. An encoder on a master axis commands speed and direction of the slave axis. An electronic gear is incorporated, so the slave axis runs synchronously to the master axis with a programmable ratio.

PTS-I: **Position Controller with Indexer**

Incremental motor positions can be set by the digital inputs. A homing routine is incorporated. In addition to the standard version, customer versions of the PTS can be developed to meet your special demands. Contact BAUTZ when interested.

There are separate manuals for the different types of PTS. But prior working on the PTS, the DSK drive must be set up correctly. For the drive's set-up procedure, the PTS must be switched off. This can be done by setting the PTS hex switch "mode" to position 0 (cp. figure 4.11). Cycling the drive's supply activates mode 0 (= PTS off). Proceed according to chapter 5 of this manual and refer to the PTS manual afterwards.

WARNING: With a PTS installed, refer to the PTS manual for the pinout of the Submin-D-sockets underneath the DSK casing. They are not needed for the set-up procedure of the DSK.

5 Set-Up Procedure

5.1 Figure: LEDs and Adjustment Elements

The displays, adjustment elements, customer and resolver modules are behind the front door. The LEDs can be seen through a safety glass even if the front door is closed.

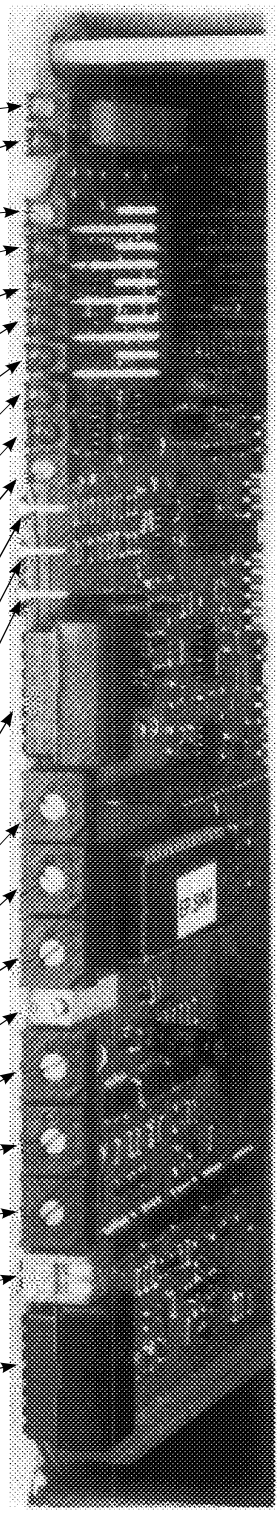

LED - INDICATORS

LED "DC-bus"
Supply voltage applied, DC-bus ready

LED "Power-dump"
Power-dump circuit is active

LED "Aux. voltage"
Auxiliary voltage applied, logic voltages ready

LED "Overcurrent"
Motor short circuit phase-to-phase or phase-to-ground

LED "Overvoltage"
DC-bus exceeded 400 V

LED "Overtemperature"
Motor or drive reached its temperature limit

LED "$I^2 \times t$"
Current demand exceeded I_{rms} setting for too long

If LEDs "Overtemp." and "$I^2 \times t$" are lit simultaneously, there is a resolver fault.

LED "I_{max}"
Peak current demand reaches adjusted I_{max} limit

LED "Lim"
Enable- or limit switch input open or "low"

LED "Ready"
Drive ready (not necessarily enabled)

Test Jacks

Current monitor "I"
1 V = 20% of rated RMS-current of drive

Velocity (tacho-) monitor **"n"**
1,5 V = 1000 rev./min.

Analogue COM

Resolver module
Resolver-to digital-converter circuit´s elements

Potentiometers

Potentiometer "dn/dt"
Slope of ramp integrator at velocity comd. input 1

Potentiometer "n_{el}"
Velocity (tacho-) signal attenuation

Potentiometer "n_{elcom}"
Velocity command signal attenuation

Potentiometer "Offset"
Trimming motor standstill at zero velocity command

Potentiometer "Gain"
Simultaneous adj. of PI-speed control circuit´s factors kv and ki

Potentiometer "I_{rms}"
Sets motor current allowed to flow continuously

Potentiometer "I_{max}"
Sets peak motor current limit

Pole pair number
Switch to adapt drive to motor pole pair number

Customer module
Drive adaption to certain motor and load conditions possible here

5.2 Safety Instructions

The set-up procedure should only be performed by skilled personnel with an extensive knowledge in electrical engineering or motion technology.
Following the instructions step by step should make the set-up of the axes easy.
Nevertheless, these instructions can only be considered as recommendations, which in some cases might not be able to prevent damage to men or machine parts as a result of lack of precaution or other human errors.
Our technicians will assist you in setting up the drive or training your personnel upon request.

In the case of multi-axis applications, please do not work on more than one axis at a time, switching off power from all other drives. As long as position controllers are inactive, enabled drives have a drift, so that motors could move slowly into hazardous positions.

In any case, uncouple the load from the motor first. Wiring mistakes can cause a motor runaway, which cannot be stopped by limit switches. Even a decoupled motor can move jerkily and fall down, if not secured mechanically.

5.3 Option cards

Check if the drive has one of the option cards integrated.
You can find this information on the label inside on the front door. For type designation, cp. chapter 1.4.
The label might not have been changed if such boards were added later by the customer.
All option cards are shown and described in chapter 4. They can be seen easily behind the front door.

Please pay special attention to the following points, if one of the following modules is integrated:

PTS:	Set Hex switch "Mode" to position 0 mode (cp. chapter 4.3.3)
PW3:	different pin assignment of submin-D-socket (cp. chapter 4.3.2)
ES3:	selection of 2,048 lines/rev. requires changes on resolver module (cp. chapter 4.3.1).

5.4 Supply and Motor Wiring Check

Check the wiring according to chapter 3.1 in general and according to the following steps in particular:

- Disconnect all connectors from the drive. In order to do this, you have to dismount the optional cable holder (cables stay fixed on it) from the heat sink.
- Switch on auxiliary voltage and measure about 230 V_{AC} on unplugged cable to X8 between its terminals 2 and 3.
- Switch on supply voltage, measure the incoming voltage of the unplugged cable X7 phase to phase: About 230 V_{AC} is a must, **400 V_{AC}. destroys the drive!** If the voltage is higher than 240 V, use another transformer tap. Otherwise, it is necessary to use another transformer. When having a single-phase supply measure 230 V_{AC} on U1 and W1 of unplugged cable to X7.
- Switch off auxiliary and main supply again. Do not plug in connectors X7 and X8 yet.
- If existing, check circuit of external powered dump resistor circuit: Cp. chapter 3.6, connection according to figure 3.5.1. The fuse must not have contact with mains. The cable screens should be connected at drive side only. Plug in connector X6.
- Check motor cable plug to plug: Wired according to 3.5.1? No interchanges? GND connected? Screen wiring done according to chapter 3.5.2?
- If the motor has a holding brake inside: Check correct wiring of the motor brake and the auxiliary contactor. Connect motor cable at motor side only. Then do the following

  Test: Connect 24 V external, short by a wire link terminal 1 and 2 of plug to X4. Brake has to open now and close when taking away the link. Do not connect motor cable to the drive.
- Measure resolver cable from connector X3 to the mating plug of the motor according to connection plan DSK, chapter 3.5.1. Were twisted pairs chosen correctly, no wire interchanges? Screens wired according to chapter 3.5.3?
  If BAUTZ motors M25x–M50x or F5xx–F8xx are connected: Look into the disconnected mating plug on motor side:
  Rising numbering of the pins must be readable in CCW sense, this is the standard of BAUTZ mating connector set 57.346. Please note that suppliers of such connectors might also offer CW numbering! Now connect resolver cable both ways. Do a resolver

  Test: Plug X8 (not X7) only.
  Turn I_{max} and I_{eff} potentiometer fully CW. Switch on auxiliary voltage supply. If necessary, open brake as described before. Turn motor shaft manually at least 1 rotation. Ignore the other LEDs flashing or lighting.
  Do LEDs "Overtemperature" and "$I^2 \times t$" remain off?
  If so, the resolver wiring is correct. If one of the two LEDs illuminates, the wiring is faulty.
  Disconnect auxiliary voltage supply.

5.5 Drive Adjustments and Adaptations

5.5.1 Resolver Module

The resolver module for the BAUTZ motors of the series M25x0150–M50x and F5xx– F8xx has the following components:

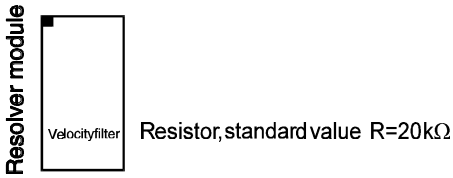

Figure 5.1 Resolver Module

Usually, there are no changes necessary.

Exceptions:

a) Option ES3 incorporated and set for 2048 imp/rev. – cp. chapter 4.3.1.
b) Motors bigger than the types mentioned above are used.
c) Motors of other manufacturers are used.
d) When using motors with $k_E \geq 24$ V, cp. chapter 5.5.3.2.

The cover of the standard module is marked RM-S02-20K.

5.5.2 DIP Switch: Number of Motor Pole Pairs

Turn both switches to "off" for the motors of the M and F series mentioned above. In other cases, contact BAUTZ.

5.5.3 Customer Module

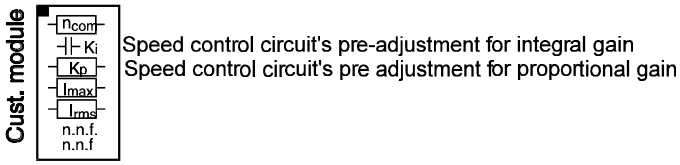

Figure 5.2 Components on Customer Module

5.5.3.1 Resistor Values for Attenuating the "Velocity Command" Input Signals

The factory setting for n_{com} is 20 kΩ. When the potentiometer "Vel_{com}" is turned fully CW, the command signals from the inputs are given to the speed control circuit not attenuated.
If you give the maximum velocity command of 10 V, and the motor rotates too quickly under the following conditions:

– the potentiometer "Vel_{com}" is turned fully CW (factory setting), and
– the potentiometer "Vel" is turned fully CCW (factory setting),

then the resistor on the customer module needs a higher value.
For set-up leave status quo until further notice.

5.5.3.2 Customer Module Elements C = 100 nF, R = 150 kΩ for PI Speed Control

The standard values may be kept during the set-up procedure. For optimising the potentiometer "Gain", the following has to be observed:
If motors with a voltage constant $k_E \geq 24$ V/1,000 min–1 are used, it may be better to reduce the resistor for K_p (third element from top) from 150 kΩ to 68 kΩ, and to increase the capacitor value for K_i (second element from top) from C = 100 nF to C = 220 nF.

This applies to the following BAUTZ servo motors:

M404D	F504D
M406D	F634F
M504E	F804F
M504F	
M506F	

The capacitor stands for the integral portion, the resistor for the proportional portion of the speed control circuit. Both portions are adjustable simultaneously by the potentiometer "Gain".

If these changes are made on the customer module, the resolver module must also be changed. The fifth resistor from top (tacho filter) on the resolver module has to be increased from 20 kΩ to 47 kΩ.
This results in an improved tacho filtering. Compare chapter 5.5.1.

5.5.3.3 Customer Module Resistor Values for I_{max} and I_{rms}

The customer module has no components for "I_{max}" and "I_{eff}" fitted on delivery. In this case, the drive's maximum currents are limited only by the potentiometer settings .The standard module cover is marked: KM-SO1.

Normally the potentiometer for I_{max} covers a range of 0–17.6 A_{RMS} and the potentiometer for I_{eff} covers the range of 0–8.8 A_{RMS}. Both upper limits of these ranges can be reduced by fitting resistors to the customer module. The following table shows the currents and their corresponding resistor values, suitable to adapt the drive to the standard BAUTZ motors. If these resistors are soldered in, the potentiometers for I_{max} and I_{eff} have to be turned fully CW to their maximum position. After having proceeded accordingly, the permissible continuous drive current I_{rms} is set to the rated current of the motor I_N. The peak currents in the table are twice the rated currents of the motors .The $I^2 \times t$ circuit of the drive protects the motor electronically against overtemperature. This allows the thermal switch to become effective in case of overstressing. Therefore the drive's peak current should not exceed twice the rated continuous current of the motor.

Table: Resistor Values for I_{max} and I_{rms}

Motor type	$I_N = I_{rms}$	R for "I_{rms}"	I_{max}	R for "I_{max}"
M254B	3.0 A	30 Ω	6.0 A	470 Ω
M256B	4.35 A	120 Ω	8.7 A	820 Ω
M404B	7.5 A	680 Ω	15.0 A	2,700 Ω
M404C	4.3 A	110 Ω	8.6 A	820 Ω
M404D	2.6 A	22 Ω	5.2 A	390 Ω
M406C	8.1 A	820 Ω	16.2 A	3,300 Ω
M406D	4.85 A	160 Ω	9.7 A	1,000 Ω
M504E	8.8 A	not fitted	17.6 A	not fitted
M504F	6.2 A	360 Ω	12.4 A	1,800 Ω
M506F	8.5 A	2,200 Ω	17.0 A	3,900 Ω
F504A	4.7 A	150 Ω	9.4 A	910 Ω
F504D	2.4 A	18 Ω	4.8 A	390 Ω
F634C	8.6 A	4,700 Ω	17.2 A	4,700 Ω
F634F	3.1 A	33 Ω	6.2 A	510 Ω
F804F	7.4 A	680 Ω	14.8 A	2,700 Ω

If other motors are used, or if another relation of I_{max} to I_{rms} is needed, the following charts will assist:

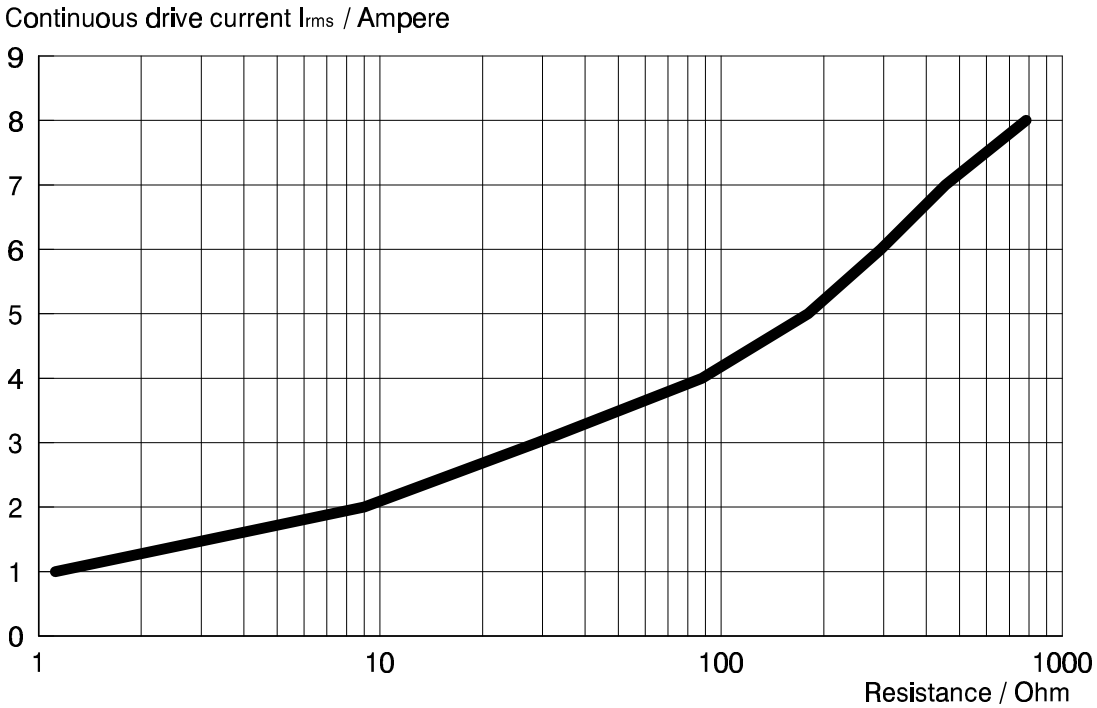

Figure 5.4 Resistor Values for I_{rms} on the Customer Module

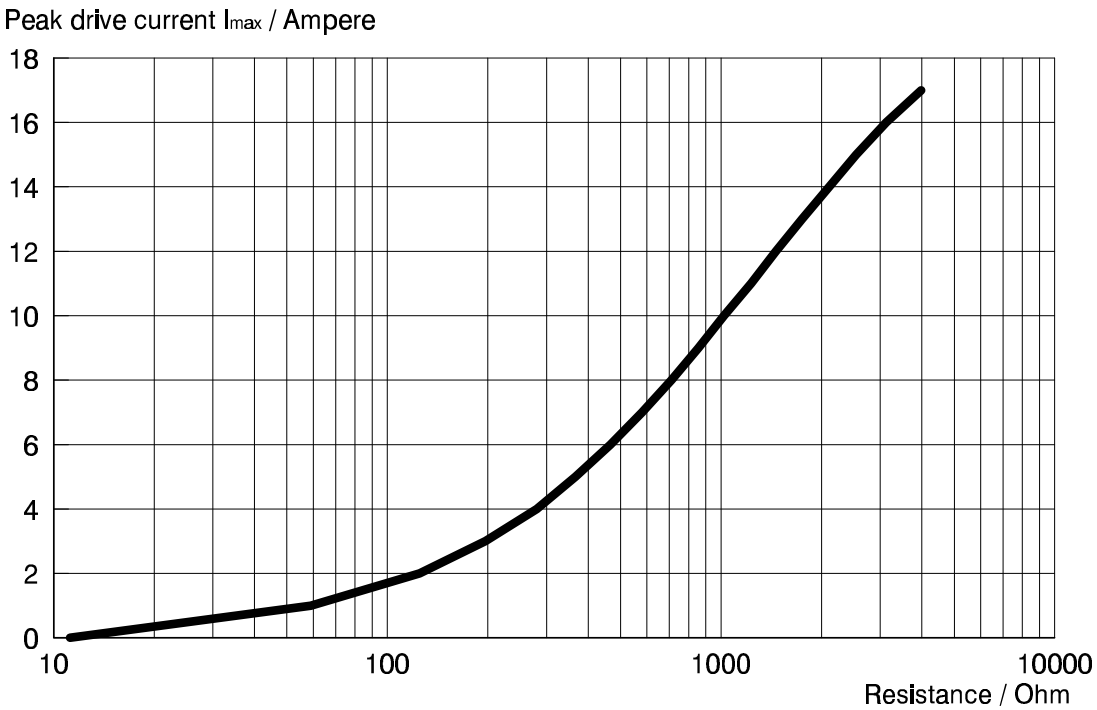

Figure 5.5 Resistor Values for I_{max} on Customer Module

As an alternative to fitting resistors to the module, you might also use the current monitor output to adjust the front potentiometers. The corresponding instructions can be found in chapter 5.5.6, in case you prefer not to change the customer module.

5.5.4 Limit and Enable Switches, External Velocity Reference Potentiometer

Now the limit switch and enable inputs should be set "High". Either use your external 24 V in compliance with wiring diagrams in chapter 3.4.1 and 3.4.2, or take the auxiliary +15 V from XA1-5.
In order to have a velocity command signal, connect a external potentiometer to velocity command signal input 1, as shown in the diagram in chapter 3.5.1. If the velocity command signal input 2 is already wired, disconnect it.
If any wires are already connected to the terminals XB1-2 for "Reset", to XB1-3 for "Drive active", to XB1-4 for "I_{max} external", to XB1-6 for "$I^2 \times t$", to XB1-8 for "I Monitor" and to XB1-9 for "Tacho Monitor", temporarily disconnect them all in order to avoid any disturbances from outside. Connections to COM for GND of your external +24 V remain.

5.5.5 Basic Settings of Control Potentiometers

- dn/dt turn fully CW
- Vel turn fully CCW
- Vel_{com} turn fully CW
- Offset do not change (approx. centre)
- Gain turn fully CCW

If the customer module resistors for I_{max} and I_{rms} are fitted in compliance with chapter 5.5.3.4, the potentiometers have to be turned:

- I_{rms} fully CW
- I_{max} fully CW.

If you do not want to make these adjustments by the customer module resistors, proceed according to the following chapter 5.5.6.

5.5.6 Adjustment of Pots "I_{max}" and "I_{rms}" in Compliance with Current Monitor

This point can be ignored if resistors are fitted on the customer module according to chapter 5.5.3.3.
This chapter describes how the potentiometers can be adjusted by means of the current monitor output. Proceed as follows:

I_{max} adjustment

- Motor connector X5 stays unplugged!
- Connect a voltmeter (range 10 V_{DC}) to the current monitor (XB1-8) with reference to "Analog COM" at the test jacks behind the front door.
- The adjustments according to chapters 5.5.4: "Limit and Enable Switches" and 5.5.5: "Basic Settings of Control Potentiometers" must have been made.
- Turn external velocity command potentiometer, connected to velocity command input 1, fully CW or CCW.
- Plug in X8 (Aux. supply), and switch on auxiliary voltage supply. LED "Lim" must not illuminate, disregard other LEDs.
- If your safety circuit uses the relay output "Drive ready" at X2, and if that circuit is already active, plug in X2.
- Set "I_{rms}" potentiometer to approx. midrange position.
- Plug in X7 (supply voltage)
- When switching on X7, pay attention to the voltage of the voltmeter and set I_{max} potentiometer. Settings are calculated as follows:

Example:

The connected motor may have a rated (**n**ominal) current of $I_N = 7$ A

Then use rule of three:

$$\frac{5V\ (U_{monitor})}{8{,}8\ A\ (\text{max. contin. curr. DSK})} \times 7A\left(I_N\ \text{motor}\right) = \hat{4}V\left(U_{monitor}\right)$$

4 V would be the right monitor voltage for 7 A = I_{rms} = I_N of the motor.

In normal applications you would choose:

$$I_{max}\ (\text{drive}) = 2 \times I_N\ (\text{motor})$$

meaning:

$$U_{monitor} = 2 \times 4\ V = 8\ V = \hat{I}_{max}$$

8 V would be the correct monitor voltage for 14 A I_{max}.

Replace I_N (motor) in the example with the rated current of your motor.

The resolver should be connected now. Switch on supply voltage and set the potentiometer I_{max} in such a position that $U_{monitor}$ corresponds to your calculated value for $I_{max.}$. The $I^2 \times t$ LED must not illuminate.

Note:
You can set the potentiometer for peak current I_{max}, although the motor connector X5 is unplugged. The current monitor actually shows the drive's internal current command signal. With motor cable unplugged, the peak current demand is not limited in time, because no real motor current is measured. The $I^2 \times t$ circuit does not react that way.

I_{rms} Adjustment

- Open enable input.
- Plug in X4 (brake) if a motor with brake is used, so that the brake can be opened.
- Switch off auxiliary and main voltage supply.
- Exchange wires U2 and V2 of motor cable X5.
- Plug in X5 (motor cable) with motor connected.

Note: If these phases are interchanged, the motor will block itself. After the peak current has flown for a short period of time, the $I^2 \times t$ circuit will reduce the current to I_{rms}.

WARNING: **Motor must be decoupled from load!** A different interchange of phases or turning the motor shaft from outside could lead to uncontrollable running of the motor at highest speed.

- Switch on auxiliary and main voltage supply.
- Enable drive.
- **When the $I^2 \times t$ LED illuminates,** set potentiometer I_{rms} in such a position that the monitor voltage corresponds to your calculated value for I_{rms} . In the above example this would be 4 V monitor voltage for 7 A rated motor current.
- Disable drive.
- Disconnect main and auxiliary voltage supply.
- Plug off connector X5 and interchange phases U2 and V2 back again. Plug in X5. I_{eff} and I_{max} are set now.

5.5.7 Adjustment of Pots "dn/dt", "Offset", "Velocity Command" and "Velocity"

- After having proceeded according to chapter 5.5.5.
- Set external potentiometer for velocity command signal on input 1 in approx. midrange position.
- Leave potentiometer "Vel" turned fully CCW.
- Connect auxiliary voltage to X8 and switch on
- If not already done: without supply, plug in motor connector X5.
- Plug in resolver connector X3, if not already done so.
- The motor must now be separated from the load and secured against jerky movements.
- Plug in connector X7 (supply).
- Switch on supply voltage.
- Enable drive at input XA1-8, if not already done so. The motor rotates.
- The motor must have torque now, the speed must be controllable by the external potentiometer.
  If this is not the case, check if the brake has opened.
- Provide 0 V velocity command by disconnecting the tap of the potentiometer at velocity command input 1, and short-circuit both of its terminals. (Assuming that velocity command input 2 is shorted, too.)
  Set the potentiometer on offset, so that the motor stands still.
- Reconnect potentiometer. Provide 1 V velocity command signal.
  The motor rotates at a certain speed now. The voltage of the velocity monitor (n Monitor) gives a tacho signal of the speed. Connect a voltmeter (10 V_{DC} range) to the tacho monitor test jack behind the front door. Reference potential is Analog COM.

  Monitor voltage 1.5 V = 1000 min^{-1} ±10 %

  If the speed has to be measured more exactly, use a speedometer. Increase the value set on SW1 slowly, until 10 V are reached at the input. Now adjust the maximum motor speed. Should you wish to keep potentiometer "Vel_{com}" and "Vel" at basic setting, you can find a suitable resistor value for n_{com} on the customer module by connecting a resistor decade or a potentiometer, which can be measured afterwards. This is described in chapter 5.5.3.1.
  If you want to keep the customer module at standard, the potentiometer for "Vel_{com}" has to be adjusted as follows:
  If the speed of the motor is too high with a command signal of 10 V applied, the potentiometer "Vel_{com}" will have to be turned CCW, consequently the motor will slow down.
  If you want to switch just a fix command signal value to velocity command input 1 afterwards, and you do not want to connect a position controller to velocity command input 2 later, then adjust potentiometer dn/dt now. The acceleration and deceleration ramps, resulting from a step input to velocity command input 1, can be adjusted by that potentiometer (cp. chapter 4.2.1.1). CW position produces slow velocity incline, CCW position produces a steep slope.

5.5.8 Adjustment of Potentiometer "Gain"

This setting makes sense only when load is coupled to motor. But **do not couple yet.**

Attention: Before coupling the load remember that until now no position controller supervises the axis. A broken wire on the external velocity command potentiometer or elsewhere could make the motor uncontrollable.
Please, conscientiously check the following points <u>as long as the load is not coupled</u>.

CHECK LIST – Please make sure that:

- The complete mechanical travel range can be used without danger or difficulties.
- The emergency stop circuit can be activated, powers down the drive and actively stops the motor by opening both limit switches.
- An emergency stop switch is within reach of all personnel involved.
- The (optional) motor brake and the corresponding auxiliary contactor are working correctly, external 24 V are on.
- A safety circuit, which might be connected to X2 (Drive ready), would power down the drive in case of a drive fault. **If a fault situation occurs in the drive it will only be disabled, the motor and load will coast and not brake actively. Provisions must be made to prevent this situation. Read WARNING** in chapter 4.2.2.2, section Relay Output: Motor Holding Brake.
- **The limit switches are effective and respond correctly to the motor direction.**
- **The limit switches <u>remain</u> open over the whole final way of travel.**
- The length of that final way of travel is sufficient for braking under all conditions. A buffer should be provided for worst case.
- Turn potentiometer "dn/dt" fully CCW (slow velocity incline).
- The following point can normally be disregarded, but could be helpful in special cases: You may wish to connect a step function generator to velocity command input 2. You could watch the step response of the axis at the drive's tacho monitor with an oscilloscope, in order to find the best adjustment for the potentiometer "Gain". Connect the step function generator to SW2 now and set up your function generator. Provide signals ≤ 0.5 V, to avoid that the drive's current limit is reached. Setting up the generator is more difficult if the load is coupled. When using velocity command 2, disconnect and short velocity command 1.
- If provided, a position controller may be connected safely now, as the load is not yet coupled. The two wires could become interchanged easily between the velocity command output of the positioner and velocity command input 2 of the drive. Then the velocity command is given in reverse direction, compared with encoder feedback to positioner. This causes motor runaway at maximum speed. For that reason, a reasonable following error limit should be set. Exceeding this limit will lead to opening of both limit inputs of the drive. The final adjustment of both positioner and drive gain is made later when the load is coupled.

At first check the econder wiring as described in chapter 5.6.1 and refer to the manual of your position controller. Faulty or missing encoder signals to the positioner could cause full velocity command and motor runaway, too. Rotate and position the motor without load via the position controller for test now.

- If no positioner is provided, use the external potentiometer on velocity command input 1 to run the motor. But first, for limiting the maximum motor speed, connect two resistors, each 47 kΩ , in series with the +15 V and –15 V supplies of the potentiometer. Check the effectiveness. You can run the motor slowly in both directions. A broken wire here can cause motor runaway. Be careful when motor is coupled.

- You have connected either a position controller at velocity command input 2 or the external potentiometer at velocity command input 1, not both at the same time.

Now, when all checks are done, when the drive is disabled and powered down you may couple the load to the motor shaft by using a coupling, torsionally as stiff as possible, between motor and load.

Power up and enable the drive only, if you can react immediately to an unpredicted movement of the load.

You can control motor and load now by the positioner or by the potentiometer in both directions. Connect a voltmeter or better an oscilloscope to the current monitor of the drive. Measuring Range: 10 V_{AC}

With the load travelling slowly, turn the potentiometer "Gain" of the drive CW cautiously until motor and load sound hard and make a howling sound.
Set the potentiometer "gain" back CCW approx. 30°, i.e. "1 hour". The voltmeter or scope reading increases with the beginning of the audible resonance. Gain is set correctly on the border where the reading starts to rise, but is not higher than with a "weak" gain setting.

Switch the voltmeter to "DC". Verify by means of the current monitor that there are no mechanical problems on the complete way of travel. At slow and constant speed, the motor current will rise remarkably, if such difficulties occur.

In most cases it is sufficient to set the drive’s gain potentiometer "by ear". With critical applications, please also pay attention to which values the customer module elements kp and ki are set, as described in chapter 5.5.3.2. If motor performance is not satisfying, it may be improved with the changes mentioned therein.

A step signal generator at velocity command 2 and a two-channel oscilloscope for watching the tacho and current monitor signals are necessary for an optimal adjustment of the velocity control circuit in very critical applications. This way the step response of the axis can be balanced between overdamped and underdamped response in the small signal range. The criteria are the same as described in many other DC or AC servo drive user guides. As all this is barely at hand, and our drives are characterised by superb control bandwidth and excellent pre-adjustment, we omit a further description. Please do not hesitate to contact us for more information or training requirements.

5.6 Logic Signals Check

5.6.1 Encoder Output to External Position Controller

If there is no option card PW 3, and no PTS with a different pinout, please measure before connecting the submin-D-socket, that the supply for the "quasi encoder" does not exceed 5.5 V_{DC}. The standard resolution is 1,024 lines/rev. For another resolution and an adjustable index (or marker) pulse the option card ES3 can be used (cp. chapter 4.3.1). If option PW3 (with or without ES3) is incorporated, its external 24 V supply must never be connected to Pin 9, but to Pin 1 (cp. chapter 4.3.2).
If an option card PTS is incorporated, the pinout is totally different. It is described in the separate PTS reference manual then.

5.6.2 Other Logic Signals

The other logic signals on connector XB1 are usually not needed (with exception of output $I^2 \times t$). Information concerning these signals can be found in chapter 4: "Functions":

Reset	refer to	chapter 4.2.1.2
Drive active	refer to	chapter 4.2.2.2
I_{max} external	refer to	chapter 4.2.1.1
$I^2 \times t$	refer to	chapter 4.2.2.2
Current monitor	refer to	chapter 4.2.2.1
Velocity monitor	refer to	chapter 4.2.2.1

WARNING:

Please keep in mind that the axis can get out of control if a position controller’s velocity command signal is interchanged in polarity. Therefore limit the maximal permissible following error of the position controller. If a reasonable value is exceeded, make sure that both limit switches of the drive are opened. Setting up the positioner is only safe when the motor is decoupled from the load.
From now on proceed according to the set-up instructions of your position controller.
If the option card PTS is integrated, follow the instructions of its separate reference manual.

Inrush Current Limitation

for

SCE 903, 903A3, 904, 905 and DSK12-C8

In the case of servodrives in the 1 to 7 kW range, all commercially active manufacturers have succeeded in providing inrush current limitation with NTC thermistors as state of the art. These are semiconductors with the property of having a resistance with a **N**egative **T**emperature **C**oefficient. These components have succeeded due to the need for small dimensions and because of their operating safety. For this reason these semiconductors are also used in drives SCE903A3, SCE903, SCE904, SCE905 and DSK12-C8.

There is still the need to charge an empty energy store on the device (in this case the bus capacitor) when powering up. This energy store is for smoothing the bus voltage and for supplying peak power to the motor when demanded. It also smoothes power consumption from the mains.

At power up the resistance of an empty capacitor is infinitesimally small. If DC voltage is switched to a capacitor, the inrush current is limited only by the line resistance and the internal resistance of the power supply (in this case: mains, possibly transformer, and mains rectifier).

The inrush current to the empty bus capacitor in servodrives of this kind can be limited in various ways:

1. A series resistor bridged by a contactor when the DC bus voltage has risen,
2. An inrush current inductance to limit current rise,
3. A partially controlled rectifier bridge using thyristors,
4. NTC thermistors.

In power supply networks, especially in industrial installations, efforts are made to achieve the smallest possible internal resistance, i.e. few voltage drops under load and low power losses. The internal resistance of the network is increased by an inductance or by an isolating or auto transformer in the drive´s power supply.

An alternative possibility is to decide for reasons already mentioned to increase the internal resistance of the network and use NTCs with small drives (in the 1 to 7 kW range). This is a cost-effective and highly reliable solution.

Figure 1 shows the configuration diagram for the soft startup circuit on our AC servodrives.

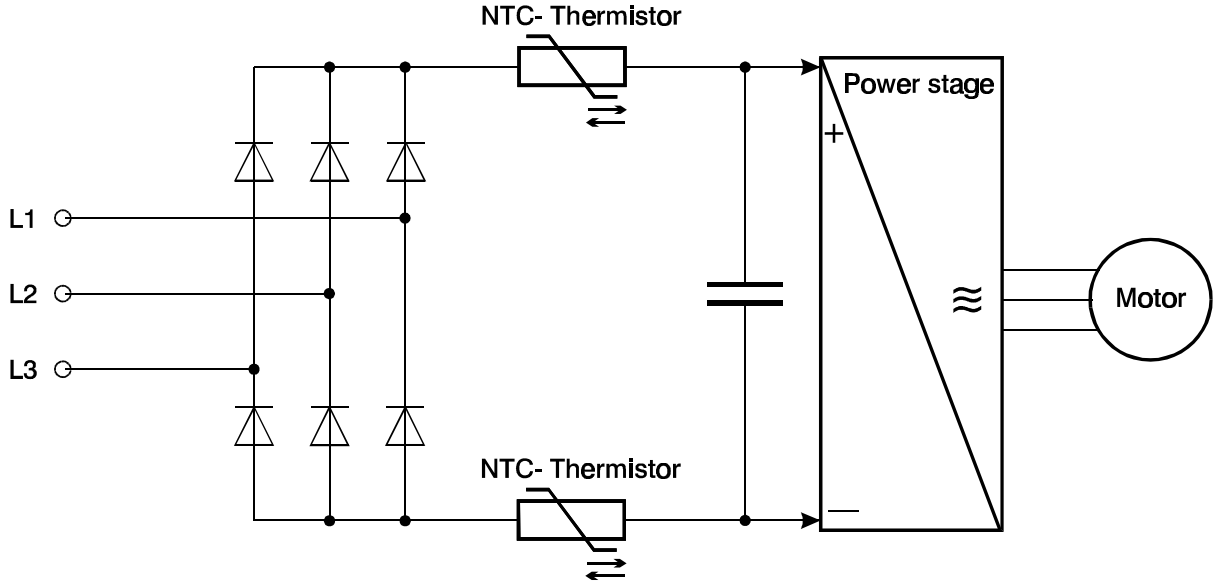

Figure 1

All the drives mentioned use NTC thermistors made by Siemens Matsushita,
i.e. resistors with negative temperature coefficients:

Drive type	Thermistor type	Resistance at 25 °C in Ohms
DSK12-C8	S364 – 2.0 - M	2.0
SCE 903-A3	SG40	10
SCE 903	SG40	10
SCE 904	SG64	7
SCE 905	SG32	4

For example, each thermistor in a DSK. has the following characteristics:

at 25 °C	a resistance of 2.0 Ohm ± 20 %
at 40 °C	a resistance of 1.26 Ohm ± 20 %
at 50 °C	a resistance of 0.95 Ohm ± 20 %
at 100 °C	a resistance of 0.28 Ohm ± 20 %
at 180 °C	a resistance of 0.047Ohm ± 20 %

The resistance of an empty capacitor is infinitesimally small. Therefore unless initial current flow is limited, very high inrush currents flow, which die away as the capacitor loading increases. The inrush current is limited by the thermistors. During operation of the drive the NTC thermistors heat up and their resistance is lowered. Therefore after switching off, a certain period of time must be allowed for the thermistors to cool down, so that they will limit the inrush current when the drive is powered up again.

In normal circumstances around 3 minutes is enough time.

Problems may arise if:

- the ambient temperature in the cabinet is high, or
- the 3 minute waiting time is not practicable for the application.

If the time cannot be guaranteed, the following problems may occur:

- power supply contactor switches may be overloaded, leading to
- welding of switch contacts,

!!! This is a safety-related matter, since in the event of an emergency stop, it may become impossible to switch of the power supply!!!

- mains fuses may blow,
- damage may be caused to the drive's mains rectifier.

To limit inrush current still further, we recommend that you fit the following circuit in appropriate cases:

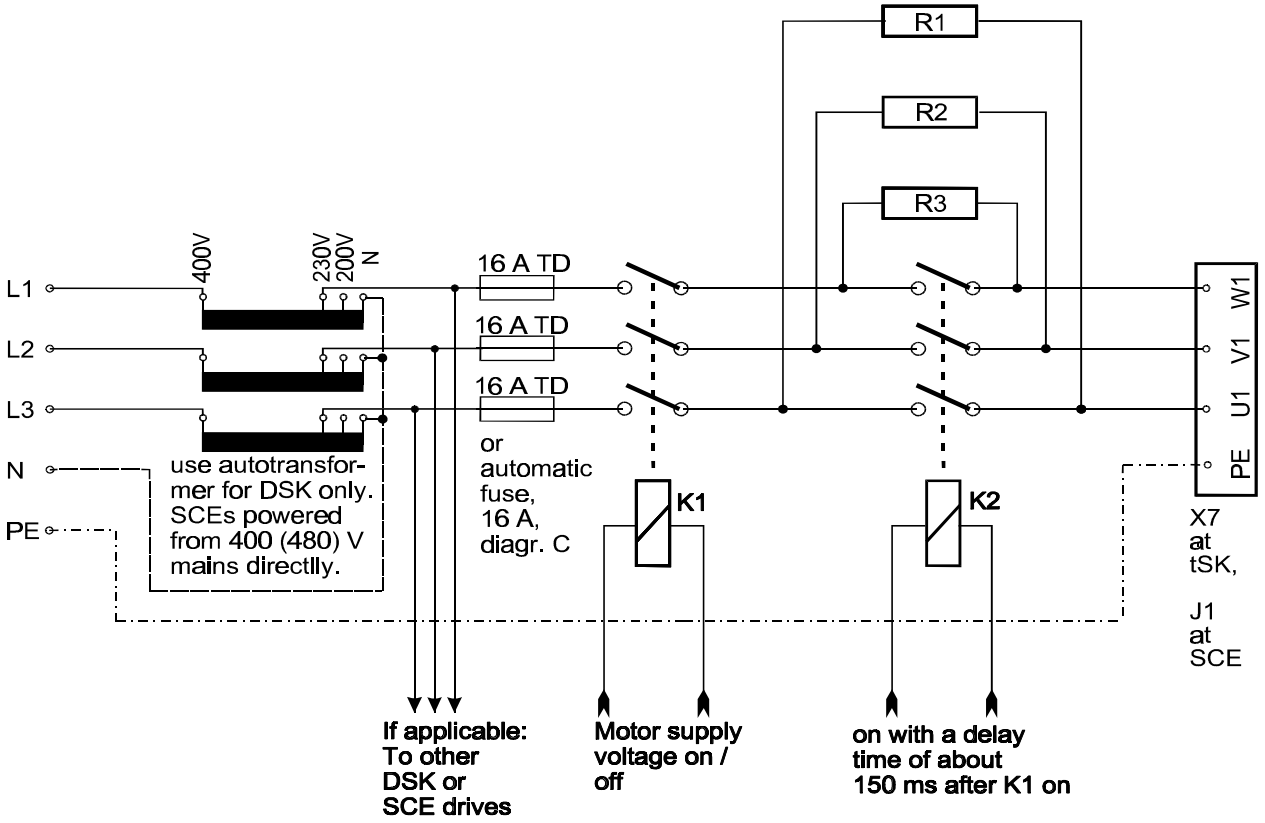

For resistors R1, R2 and R3 we suggest a value of about 15 Ohms.

Due to the high peak loads that these resistors have to stand it is recommend that each be fitted with three high duty, wire wound resistors in series. For example, we find that suitable resistors of this type can be obtained from the manufacturers Vitrohm; they are series KV, type 212 - 340, rated 4.7 Ohms, 10%, giving 14.1 Ohms each for R1, R2 and R3.
The manufacturer's address is: Deutsche Vitrom GmbH & Co. KG, Siemensstr. 7 - 9,
D-25421 Pinneberg, Tel. +49 4101 7080, Fax +49 4101 722 787.

We recommend using 16 A types for contactors K1 and K2.

Using this circuit, the interval between switching the amplifier off and powering it up once more may be short.

But remember that these resistors take up a heavy load during the power up procedure.
The resistors need time to cool down between one power up and the next. Multiple powering up and down will destroy this circuit.

BAUTZ
Antriebstechnik - Motoren und Steuerungen
Ein Unternehmen der Pacific Scientific-Gruppe

Safety and operating instructions for drive controllers

in conformity with the low voltage directive 73/23/EEC

1. General

In operation, drive controllers may have live, uninsulated and possibly also moving or rotating parts, as well as hot surfaces, depending on their degree of protection.

In case of inadmissible removal of the required covers, of improper use, wrong installation or incorrect operation, there is the danger of serious personal injury and damage to property.

For the further information, see documentation.

All operations serving transport, installation and commissioning (startup) as well as maintenance are to be carried out by skilled technical personnel (in accordance of IEC 364 or CENELEC HD 384 or DIN VDE 0100 and IEC 664 or DIN/VDE 0110 and national accident prevention rules).

For the purposes of these basic safety instructions, skilled technical personnel means persons who are familiar with the installation, assembly, startup and operation of the product and have the qualifications needed for the performance of their duties.

2. Intended use

Drive controllers are components designed for inclusion in electrical installations or machinery.

In case of installation in machinery, commissioning of the drive controller (i.e. the starting of normal operation) is prohibited until the machinery has been proved to conform to the provisions of the directive 89/392/EEC (Machinery Safety Directive - MSD). Account is to be taken of EN 60204.

Commissioning (i.e. the starting of normal operation) is admissible only where conformity with the EMC directive (89/336/EEC) has been established.

The drive controllers meet the requirements of the low-voltage directive 73/23/EEC. They are subject to the harmonized standards of the series EN 50178/DIN VDE 0160 in conjunction with EN 60439-1/VDE 0660, part 500, and EN 601 46/VDE 0558.

The technical data as well as information concerning the supply conditions shall be taken from the rating plate and from the documentation and shall be strictly observed.

3. Transport, storage

The instructions for transport, storage and proper use shall be complied with.

The climatic conditions shall be in conformity with EN 50178.

4. Installation

The installation and cooling of the appliances shall be in accordance with the specifications in the pertinent documentation.

The drive controllers shall be protected against excessive strain. In particular, no components must be bent or isolating distances altered in the course of transportation or handling. Electronic components and contacts shall not be touched.

Drive controllers contain electrostatic sensitive components which are liable to damage through improper use. Electric components must not be mechanically damaged or destroyed (potential health risks).

5. Electrical connection

When working on live drive controllers, the applicable national accident prevention rules (e.g. VBG 4) must be complied with. The electrical installation shall be carried out in accordance with the relevant requirements (e. g. cross sectional areas of conductors, fusing, PE connection). For further information, see documentation.

Instructions for the installation in accordance with EMC requirements, like shielding, grounding, location of filters and wiring, are contained in the drive controller documentation. They must always be complied with in the case of drive controllers bearing a CE - marking. Observance of the limit values required by EMC law is the responsibility of the manufacturer of the installation or machine.

6. Operation

Installations which include drive controllers shall be equipped with additional control and protective devices in accordance with the relevant applicable safety requirements, e.g. law on technical equipment , accident prevention rules etc. Changes to the drive controllers by means of the operating software are admissible.

After disconnection of the drive controller from the voltage supply, live appliance parts and power terminals must not be touched immediately because of possibly energized capacitors. In this respect, the corresponding signs and markings on the drive controller must be respected.

During operation, all covers and doors shall be kept closed.

7. Maintenance and servicing

Comply with the manufacturer's documentation.

☞ KEEP THESE SAFETY INSTRUCTIONS IN A SAFE PLACE!